YAESU

# OPERATING MANUAL

# FT-736R

N2CKH Manual Library
http://www.qsl.net/n2ckh

**YAESU MUSEN CO., LTD.**
C.P.O. BOX 1500
TOKYO, JAPAN

## TABLE OF CONTENTS


Section 1. SPECIFICATIONS . . . . . 3
1.1 General 3
1.2 Transmitter 3
1.3 Receiver 3
1.4 Supplied Accessories 4
1.5 Options 4

Section 2. CONTROLS, SWITCHES & CONNECTORS . . . . . 5
2.1 Front Panel Controls 5
2.2 Top Panel Switches 12
2.3 Rear Panel Jacks & Switches 13

Section 3. INSTALLATION . . . . . 15
3.1 Preliminary Inspection 15
3.2 Power Connection 15
3.3 Transceiver Location and Ground 16
3.4 Antenna Considerations 16
3.5 Installation of Options 16
3.5.1 Band Module Installation 16
3.5.2 Keyer Unit Installation 17
3.5.3 CW Narrow Filter Installation 18
3.5.4 Tone Squelch Unit Installation 18
3.5.5 FVS-1 Voice Synthesizer Installation 19
3.6 Preamp Jumper Installation 19
3.7 RF Power Amplifier Connections 20
3.8 Memory Backup 20

Section 4. OPERATION . . . . . 21
4.1 Preliminary Steps 21
4.2 Initial Power Up, Band Selection 21
4.3 Mode Selection 22
4.4 Tuning Methods 22
4.5 Keypad Frequency Entry 23
4.6 Controls for Enhancing Reception 23
4.6.1 Squelch 23
4.6.2 Noise Blanker 23
4.6.3 RF Gain Control 24
4.6.4 IF Passband Shift 24
4.6.5 IF Notch Filter 24
4.6.6 AGC 24
4.7 Transmitter Operation: General 25
4.7.1 FM Transmission 25
4.7.2 SSB Transmission 25
Speech Processor
VOX
Clarifier (Receiver Offset Tuning)
4.7.3 CW Transmission 26
4.8 Programmable Tuning Steps 27
4.9 Memory Operation 27
4.9.1 Memory Storage 27
4.9.1.1 CALL Channel Memories
4.9.2 Memory Recall 28
4.9.3 Changing Memory Data. 28
4.9.4 Checking Memories 29
4.9.5 Clearing and Hiding Memories 29
4.10 Scanning 29
4.10.1 Memory Scanning 29
4.10.2 Programmable Band Limits: the PMS System 30
4.11 Repeater Operation 30
4.11.1 ARS (Auto Repeater Split) 31
4.11.2 Manual ±RPT Splits 31
4.11.3 Reprogramming Split Offset 32
4.11.4 Split Vfos 32
4.12 Priority Channel Monitoring 32
4.13 Tone Squelch Operation 33
4.14 Tips for SSB (LSB/USB) Operation 33
4.14.1 Weak Signal SSB Reception 33
4.14.2 Strong Signal SSB Reception 34
4.14.3 Suppressing QRM 34
4.14.4 Miscellanea 34
4.15 Tips for CW Operation 35
4.16 Tips for FM Communications 35
4.17 Satellite Operation 36
4.18 Packet Operation 37
4.18.1 Bell 202 (F2) Packet 37
4.18.2 QPSK Packet Operation 38
4.19 Fast Scan Television (ATV) 38
4.20 AQS Operation 39
4.20.1 Callsign (ID) Setting 39
4.20.2 Storing Other Callsigns 40
4.20.3 Digital Squelch Operation 40
4.20.4 Storing Group Codes 41
4.20.5 Channel Access Calling (CAC) 42
4.20.6 Digital Memory Lockout 43
4.20.7 FMP-1 Digital Message Processor 43
4.21 CAT System Computer Control 44

# FT-736R MULTIMODE, MULTIBAND VHF & UHF BASE STATION

The FT-736R is a solid-state, frequency-synthesized VHF and UHF amateur transceiver incorporating up to four band modules covering the 50, 144, 220, 430 and 1200 MHz amateur bands. The standard model provides 25 watts RF power output on the 144 and 430 MHz amateur bands in SSB, CW, and FM modes, with any two of the remaining three bands installable as options (10 watts output on the 50 and 1200 MHz bands).

An 8-bit CMOS main microprocessor and 4-bit i/o coprocessor provide exceptional digital integration and control: including selectable tuning rates or mode-dependent channelized tuning in selectable steps for each mode; and the widest variety of advanced scanning methods ever offered. Operating conveniences usually found only on HF transceivers, such as front panel adjustable IF shift and IF notch, a noise blanker, all-mode VOX and three-speed selectable AGC are included. GaAs FET receiver RF amplifiers are provided in the 430 and 1200 MHz band modules, and a high-stability TCXO reference oscillator is incorporated for all bands to meet the stringent demands of the higher bands.

The innovative memory system includes one hundred general purpose memories plus ten full duplex cross-band memories, one global call channel memory that can be recalled from any band or mode and up to four band-specific call channel memories, all of which store mode and receive and transmit frequencies independently. That gives you one hundred and fifteen memories storing up to two hundred and thirty frequencies. In addition, fourteen vfos are provided: two general purpose plus one PMS (Programmable Memory limit Scanning) on each band, two special-purpose full duplex vfos, and up to four clarifier (receiver offset) memories, one per band.

Each of the two full duplex vfos can be selected so that its receive and transmit frequencies and modes can be displayed and tuned independently, or linked to tune synchronously in opposite directions for satellite operation. You can retain twelve satellite

uplink/downlink modes in the special vfos and ten full duplex memories at all times. Of course, metering of either transmitter or receiver parameters is selectable during full duplex communications. For CW operators, the FT-736R offers quick-changeover semi break-in and includes provisions for an optional internal electronic keyer and narrow (600 Hz) CW crystal filter.

Naturally, with FM the predominant mode on the VHF and UHF bands, the FT-736R includes all manner of convenient features for both FM simplex and repeater operation, like a discriminator center tuning meter, special narrow FM mode (to cut adjacent channel interference in crowded areas) and Automatic Repeater Shift when tuned to 2-meter repeater subbands. The mode-dependent programmable tuning steps and tracking vfos are particularly useful. An optional subaudible Tone Squelch Unit can be programmed from the front panel, and a 1750 or 1800 Hz Burst Tone Generator is installed as standard.

An enhanced CAT (Computer Aided Transceiver) System allows addition and customization of features and user-designed controls from an external computer. The FT-736R also includes a t/r-switched DC supply line for masthead preamplifiers, activated from the front panel, and digital input connection directly to the modulator for high performance packet radio tnc interfacing (preamps, personal computers and packet tncs not supplied by Yaesu).

An efficient built-in switching-mode power supply provides 13.8VDC to power the transceiver from the AC mains, without the heating and weight of a heavy power transformer. Inside the transceiver high-grade modular design ensures easy servicing.

Optional add-on accessories include the TV-736 Amateur Television Modulator/Demodulator for ATV operation, FIF-series CAT Interface Units, SP-767 External Loudspeaker, FMP-1 AQS Message Processor, and FVS-1A Voice Synthesizer and FTS-8 CTCSS Tone Squelch Unit (both mount internally).

This manual is organized in four parts:

(1) General Description and Specifications
(2) Controls and Connectors
(3) Installation
(4) Operation

We recommend reading them in order; parts 1 and 2 will give you an idea of the functions and capabilities of the transceiver, and part 3 will guide you through installing and connecting the transceiver, and any options you may have. After reading these parts and installing the transceiver you will be ready for part 4, which should be read while sitting at the controls.

Note: For purposes of clarity in this manual, some words and abbreviations appear in lower-case typeface when used for general terms, and in upper-case when referring to specific control names. For example, "vfo" (variable frequency oscillator) is used when referring to the frequency-tunable function in general, while "VFO" refers specifically to keys so labelled and the four switches under that label on the panel.

## SPECIFICATIONS

### 1.1 GENERAL

**Operating frequency ranges** (MHz):
50-53.99999*
144-145.99999 (or 147.99999)
220-224.99999*
430-439.99999 (or 449.99999)
1240 or 1260-1299.99999*

**Emission types:**
LSB/USB (J3E voice), CW (A1A)
FM (F2D FSK, F3E voice)
TV (A3F optional, for 1.2 GHz*)

**Operating temperature range:**
-10 to +60°C

**Reference oscillator stability:**
better than ±1 ppm (+10 to +40°C),
and ±5 ppm (-10 to +60°C),
after 15 minutes warmup

**Antenna impedance:**
50 ohms, unbalanced

**Supply voltage:**
85 - 132 or 170 - 264 VAC, 50/60 Hz,
or 13.8 VDC ±10%, negative ground

**Power consumption/current req.** (Approx.):
Maximum: 250 VA
Receive: 1.5 A
Transmit: 8 A

**Dimensions (WHD):**
368 x 129 x 286 mm

**Weight:**
9 kg (19.8 lbs)

### 1.2 TRANSMITTER

**Power input:**
30 watts DC @ 50 MHz*
60 watts DC @ 144, 220*, 430 MHz
45 watts DC @ 1.2 GHz*

**Modulation methods:**
SSB Balanced, filtered carrier
FM Variable reactance (±5 kHz or ±2.5 kHz maximum deviation)
ATV* low level carrier

**Spurious radiation:**
better than -60dB

**Carrier suppression** (SSB):
better than -40dB below peak output

**Undesired sideband suppression** (SSB):
better than -40dB below peak output

**Audio characteristic** (SSB):
within 6dB from 300 to 2700 Hz

**Microphone impedance:**
600 ohms nominal (200 ohms to 10k)

### 1.3 RECEIVER

**Circuit type:**
50*, 144 MHz bands: double-conversion
Other bands: triple-conversion superheterodyne

**Intermediate frequencies:**
13.69 MHz and 455 kHz, plus
47.75 MHz on 220*, 47.43 MHz on 430,
or 133.91 MHz on 1200 MHz band*

**Sensitivity:**
SSB/CW: better than -15dBu for 12dB S+N:N
FM: better than -9dBu for 12dB SINAD

**Squelch sensitivity:**
SSB/CW: better than 0dBu
FM: better than -12dBu

**Image rejection:**
60dB or better

---

* requires optional unit

**Selectivity** (-6/-60dB):

| | |
|---|---|
| SSB, CW: | 2.2/4.5 kHz |
| CW-N (optional): | 600/1200 Hz |
| FM: | 12/25 kHz |
| FM-N: | 8/19 kHz |

**Audio output power:**
1.5W into 8 ohms with 5% THD

**Audio output impedance:**
4 to 16 ohms

## 1.4 SUPPLIED ACCESSORIES

| | |
|---|---|
| AC Power Cable | T9013285 |
| Spare Fuse | |
| 4A (for 85-132V) | Q0000006 |
| or 2A (for 170-264V) | Q0000003 |
| Preamp Jumper Plugs (2 pcs) | T9205546 |
| Long Feet (2 pcs) | R3054620 |
| Foot Pad (6 pcs) | R7054630A |

### FT-736R Model Chart

| Version → | A | B1 | B2 | C1 | C2 | H1 | H2 |
|---|---|---|---|---|---|---|---|
| **2m Band** | | | | | | | |
| Rptr Shift* (MHz | 144-148 | 144-146 | 144-148 | 144-146 | 144-148 | 144-146 | 144-148 |
| FM Ch. Step* (kHz) | 5 | 12.5 | 12.5 | 12.5 | 12.5 | 5 | 5 |
| Tone Burst (Hz) | ±600 | ±600 | ±600 | ±600 | ±600 | ±600 | ±600 |
| **70cm Band** | | | | | | | |
| Freq. Range (MHz) | 430-450 | 430-440 | 430-440 | 430-440 | 430-440 | 430-440 | 430-440 |
| FM Ch. Step* (kHz) | 12.5 | 12.5 | 12.5 | 12.5 | 12.5 | 12.5 | 12.5 |
| Rptr Shift* (kHz) | ±5 | ±7.6 | ±7.6 | ±1.6 | ±1.6 | ±5 | ±5 |
| Tone Burst (MHz) | 1800 | 1750 | 1750 | 1750 | 1750 | 1750 | 1750 |

* can be reset by operator

## 1.5 OPTIONS

| Model No. | Description | Order No. |
|---|---|---|
| E-736(DC) | DC Power Cable for operation from Ext. Supply | D4000028 |
| FEX-736-50(A) | 50 MHz Band Module | D3000529 |
| FEX-736-220(A) | 220 MHz Band Module | D3000530 |
| FEX-736-1.2(A) | 1.2 GHz Band Module for North America | D3000532 |
| FEX-736-1.2(B) | 1.2 GHz Band Module for outside North America | D3000533 |
| FIF-232Cvan | CAT/TNC Interface for Packet Radio & CAT | A9700 |
| FIF-232C | CAT Interface Unit for serial i/o connection | D3000307 |
| FIF-65A | CAT Interface Unit for Apple II Computer | D3000369 |
| FIF-MX | CAT Interface Unit for MSX Computers | D3000460 |
| FMP-1 | AQS Message Processor & digital message display | A8430 |
| FTS-8 | 37-tone CTCSS Subaudible Tone Squelch Unit | D3000333 |
| FVS-1A | Voice Synthesizer for Aural Frequency Readout | D3000371 |
| Keyer Unit B | Internal Electronic Iambic Keyer | D3000535 |
| MD-1B8 | Desktop Microphone | D1000039 |
| MH-1B8 | Handie Scanning Microphone | D1000041 |
| SP-767 | External Speaker with Audio Filters | A846001-Z |
| TV-736 | Fast Scan Television (ATV) Modulator/Demodulator | D3000534 |
| XF-455MC | 600 Hz CW Narrow Filter | D2000034 |

## Section 2. CONTROLS, SWITCHES & CONNECTORS

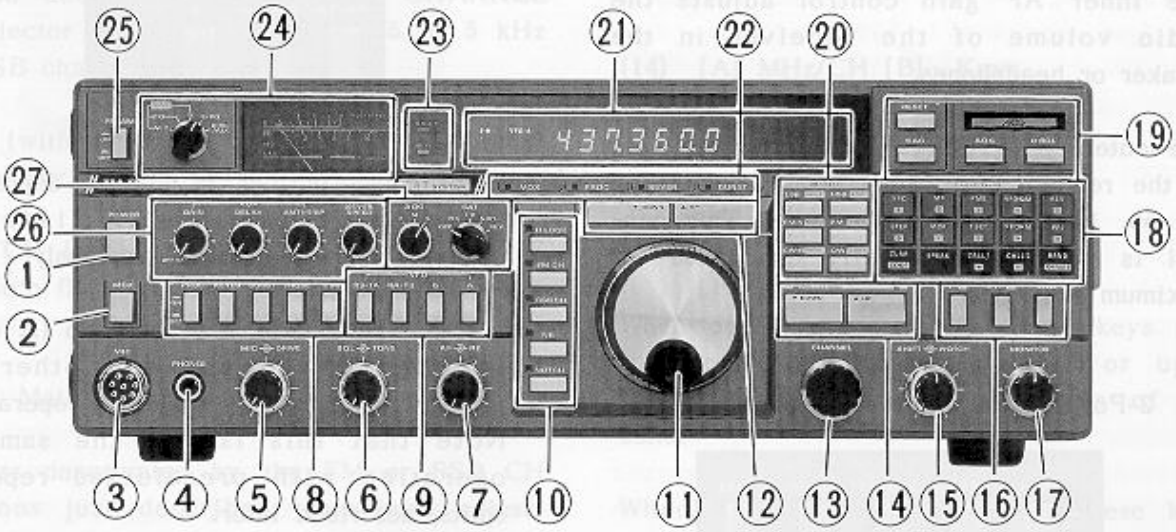


### 2.1 FRONT PANEL CONTROLS

(1) POWER

This button turns the transceiver on and off.

(2) MOX

This button manually activates the transmitter when depressed. It must be in the undepressed position for reception, and for automatic transmitter activation via the VOX and CW keying.

(3) MIC Jack

This 8-pin jack accepts the microphone plug. Pinout is indicated by the microphone schematic below. Acceptable microphone input impedance is 200 ohms to 10 kilohms, with 600 ohms optimum.

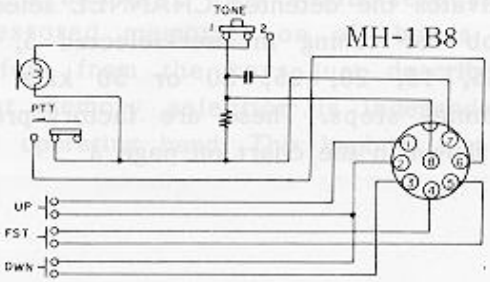


(4) PHONES Jack

This 3-contact jack accepts either stereo or monaural headphones with a 2- or 3-contact plug. When a plug is inserted the internal or external loudspeaker is disabled. Impedance is 4 to 100 ohms.

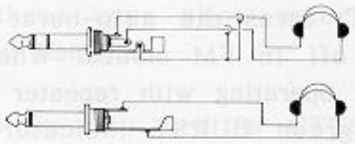

(5) MIC ⊙ DRIVE

The inner MIC control sets the transmitter audio amplifier gain during SSB and FM transmission. ALC (Automatic Level Control) for SSB and deviation level for FM transmission are set by this control.

The outer DRIVE control sets the transmitter power output for all modes.

(6) SQL ⊙ TONE

The inner SQL (squelch) control sets the signal threshold level at which receiver audio is muted.

The outer TONE control adjusts receiver audio characteristics.

(7) AF -◉- RF

The inner AF gain control adjusts the audio volume of the receiver in the speaker or headphones.

The outer RF gain control adjusts the gain of the receiver RF and 1st IF amplifier on the 50, 144 and 220 MHz bands. This control is normally set fully clockwise for maximum sensitivity.

(8) 2-Position Pushbutton Switches

PROC: enables the speech processor in SSB modes.

KEYER: turns the optional internal CW keyer on and off.

BURST: turns the auto-burst feature on and off in FM modes. When on, and when operating with repeater shift mode, the green BURST indicator above the tuning knob glows, and an audible 1750 Hz or 1800 Hz (U.S.A. version only) tone is sent automatically for ½-second whenever the PTT switch is pressed to transmit.

PAUSE: when depressed (ON), the scanner pauses for five seconds on any active channel, and then resumes scanning. When undepressed (OFF), the scanner stays on an active channel until after the channel becomes clear, and then resumes scanning.

DIM: dims the brightness of the display and meter lamp for comfortable viewing in the dark.

(9) VFO Selector Pushbuttons

One of these buttons is always depressed: pressing any other will disengage whichever one was pressed previously.

RB-TA & RA-TB: engage one vfo (A or B) for receiving, and the other for transmitting (split frequency operation). Note that this is not the same as operating with preselected repeater splits, described later.

A & B: selects operation on one vfo (A or B) only.

(10) Pushbuttons with LED Indicators

D LOCK (and red LED): disables the tuning knob and CHANNEL selector knob, to prevent inadvertent frequency changes.

FM CH (and orange LED): in FM modes, disables the main tuning knob and activates the detented CHANNEL selector knob for tuning in user-selected 5, 10, 12.5, 15, 20, 25, 30 or 50 kHz FM channel steps. These are factory-preset as shown in the chart on page 4.

SSB CH (and orange LED): in SSB and CW modes, disables the main tuning knob and activates the detented CHANNEL selector knob for tuning in 2.5 or 5 kHz SSB channel steps.

NB (with green LED): activates the noise blanker in SSB and CW modes.

NOTCH (with green LED): activates the IF notch filter in SSB and CW modes.

(11) Main Tuning Knob

Unless deactivated by the FM or SSB CH buttons just described, this knob adjusts the displayed operating frequency in 10 Hz or 100 Hz steps selectable in SSB and CW modes, or in 100 Hz steps in FM mode (10 Hz if the CLARifier is on).

(12) ▼DOWN & ▲UP Keys

When operating on a vfo, these keys (above the Main Tuning Knob) tune the display frequency in the same steps as the Main Tuning Knob, or in programmable steps if the FM CH or SSB CH button is pressed (see above). When operating on a memory, these keys select other prestored memories within the same band. Pressing and holding one of these keys for more than ½-second activates the scanner.

(13) CHANNEL Knob

When operating on a vfo with the FM CH or SSB CH button depressed, this detented knob tunes in preprogrammed steps as described for those buttons. When operating on a memory, this knob selects the prestored memories on all bands. This differs from the keys just described, in that memory selection is independent of the operating band. This knob is also used for CTCSS tone selection when the FTS-8 Tone Squelch Unit is installed.

(14) [A] MHz/CH [B] Keys

When operating on a vfo, these keys step the operating frequency down or up 1 MHz, rotating around the ends of the band.

When operating on a memory, these keys step the memory channel number down or up (regardless of whether the memory has been stored, or not). Notice that this is not the same as the CHANNEL knob or the DOWN/UP keys above the tuning knob, which select only occupied memories.

When the AQS feature is active and the CODE (Digital Code Memory) key is pressed, these keys allow selection of Digital Code Memories.

These keys are also used for CTCSS tone selection along with the CHANNEL knob when the FTS-8 option is installed.

During transmission, these two keys generate the standard DTMF A and B tone pairs.

(15) SHIFT ⊕ NOTCH

In SSB and CW modes, the inner SHIFT control allows the center of the receiver IF passband to be positioned above or below that of the received signal, to eliminate interference from signals on adjacent frequencies or to position the IF passband on a range other than those standard for SSB or CW. Normal setting is the 12 o'clock position.

The outer NOTCH control adjusts the frequency of the IF notch within the receiver passband when the NOTCH button is depressed, except in the FM mode.

(16) F[C], ENT[D] & T CALL Pushbuttons

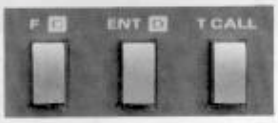


During reception, F[C] activates the alternate functions (with reverse-lettered labels) of the MODE buttons and the BAND[OFFSET] key. Each of these functions is described later, with "F+" in front of the label indicating that this button is pressed first. During transmission, pressing F[C] generates the "C" DTMF tone pair.

During reception on a vfo, ENT[D] allows keypad entry of a new frequency within the operating band. Pressing it once clears all digits below 1 MHz to zero while the 1 MHz digit blinks (10 MHz digit on the 430 and 1200 MHz bands). After keying in a new frequency on the display, press ENT[D] again to shift operation to the displayed frequency.

During reception on a memory, ENT[D] allows keypad entry of another memory channel number, in the same manner as just mentioned for frequency. During transmission, pressing ENT[D] generates the "D" DTMF tone pair.

In the FM modes, T CALL transmits a 1750 Hz (or 1800 Hz in the U.S. model) burst tone manually, for as long as the button is pressed.

(17) MONITOR

Adjusts the CW sidetone volume.

(18) FUNCTION Keypad

All but one of these 15 keys (the SPEAK key) have multiple functions: the default function labelled on the upper half of each key, and the alternate function labelled in reverse letters/symbols on the lower half of each key. The default functions occur when the key is pressed while receiving normally, without any previous keys having been pressed. These functions are described briefly below, and their applications in greater detail in the Operation chapter.

For alternate key functions, the top ten light grey keys ([1] through [0]) are used for keypad entry of frequencies, channel numbers, and other digit entries for special functions, as described in the Operation chapter. Also, while transmitting in the FM modes, these ten keys and the [*] and [#] keys serve as a standard DTMF generator: when one of these keys is pressed the corresponding DTMF tone pair is sent (like a pushbutton telephone).

Throughout this manual, alternate key functions will be indicated in square brackets [] following the default function name: for example, the default function of the BAND[OFFSET] key selects operating bands, while the alternate function (to be referred to as F+[OFFSET], when this key is pressed just after the F[C] key described above) displays the offset between the transmit and receive frequencies.

VFO

When operating on a memory, this key shifts operation to the vfo (according to

the selection of the VFO switches above the AF/RF controls). This key has no function when already operating on a vfo.

MR (Memory Recall)
This is the converse of the VFO key: when operating on a vfo, this key shifts operation to the last selected memory channel. However, when already operating on a memory, this key toggles the "skip-scan" status of the memory: causing a small arrowhead to appear just to the right of the channel number on the display. More about this later.

PMS (Programmable Memory Scan)
When pressed just after the F[C] button, (F+PMS) this key stores the frequencies of the two vfos as scanning limits (VFO A is always the lower frequency).

VFO ◪ M
When the selected vfo and memory are on the same band, this key exchanges the frequency and mode of each, and leaves operation on the vfo.

REV (Reverse)
This key reverses transmit and receive frequencies when operating split.

STEP
This key changes the vfo tuning and scanning steps in a variety of ways, depending on the operating mode and other switch settings. Details are in the Operation chapter.

MCK (Memory Check)
This key allows display of the contents of the memory channels without disturbing operation. When this key is pressed the MR indicator at the left of the display blinks. The contents of each memory channel can be checked by the MHz/CH keys or the CHANNEL selector knob. Press this key again to return the display to normal.

T SET (Tone Setting for Tone Squelch)
When the optional FTS-8 CTCSS Tone Squelch Unit is installed, press this key and then use the CHANNEL knob (or MHz/CH keys) to select the CTCSS tone to be used for tone squelch operation. The display shows the CTCSS tone frequency selection (in Hz) until T SET is pressed once more.

VFO►M
When receiving on a vfo, this key copies the vfo frequency, mode and tone settings into the last selected memory. Data stored previously in that memory is overwritten, so be careful to check the memory before pressing this key.

PRI (Priority Channel Monitoring)
This key activates periodic monitoring of a memory channel while operating on a vfo. When active, "PRI" is displayed above the memory number to the right of the displayed vfo frequency, and every few seconds reception shifts to the memory to check for activity. Pressing VFO or MR keys cancels the priority function.

CLAR[CODE] (Clarifier [AQS Code Select])
The default function of this key toggles the clarifier on and off. When on, the transmit frequency remains fixed while the main tuning knob controls only the receiving frequency (within ±10 kHz). The alternate [CODE] function recalls the AQS digital code memory when the AQS function is on, as described in §4.20.

SPEAK
When the optional FVS-1A Voice Synthesizer is installed, pressing this key causes the operating frequency and mode to be read out by the synthesizer.

CALL1
When receiving, this key switches operation to a prestored global call

channel, which may be in another mode or on another band.

CALL2

When receiving, this key switches operation to a prestored call channel on the same band. Notice that this is different from CALL1, in that each band may have a different call channel recalled by CALL2.

BAND[OFFSET]

As already mentioned, the default BAND function changes operating bands sequentially with multiple pushes. When this key is pressed just after the F[C] button, the display shows the repeater OFFSET, which can be changed with the numbered keys, followed by the ENT[D] button.

(19) AQS Buttons

These four buttons control the AQS features, described in §4.20.

AQS

This button turns the AQS feature on and off. When on, "AQS" is displayed in an orange box at the right side of the display.

D SQL

This button turns the digital squelch system on and off. When on, both the "AQS" box and a white "D SQL" box appear at the right side of the display. If pressed while the AQS feature is off, AQS is turned on.

CAC

This Channel Access Call button starts a search for a clear channel.

RESET

This key clears the AQS system, cancels the D SQL function, if active, or the F[C] or ENT[D] states, if active.

(20) MODE Selector Pushbuttons

The default functions of these six momentary buttons select the operating mode and receiver IF bandwidth:

| Button | IF BW (6dB) |
|---|---|
| LSB | 2.5 kHz |
| USB | 2.5 kHz |
| FM-N | 8 kHz |
| FM | 15 kHz |
| CW-N | 600 Hz (w/optional filter) |
| CW | 2.5 kHz |

When pressed after the F[C] key, the mode buttons select repeater shift [+RPT], [SIMP] or [-RPT], and tone squelch mode: [ENC] (encode), [T SQL] (decode on) and [T OFF] (tone squelch off) if the FTS-8 Tone Squelch Unit is installed. Note that this is not the same as Digital Tone Squelch, which is supplied as part of AQS.

(21) Display

The diagram at the bottom of the next page shows the various segments of the display.

(22) VOX PROC KEYER BURST LEDs

These indicators glow green when their respective functions are active:

VOX = voice-actuated transmission (or semi break-in CW)
PROC = speech processor on
KEYER = CW keyer on
BURST = auto-burst activated

(23) ON AIR and BUSY LEDs

The red ON AIR indicator glows while transmitting. The green BUSY indicator glows when the squelch is open while receiving, and is used for adjusting SSB and FM microphone gain (deviation) when transmitting.

(24) METER Selector and Meter

The meter indicates either relative received signal strength (S scale, top) or FM discriminator center tuning (DISC scale, bottom) while receiving; and relative transmitter power output (PO scale), or transmitter automatic level control (ALC scale) while transmitting. The METER selector determines the meter function according to operating mode:

ALC, PO and S (the three leftmost positions) select the meter functions during satellite (full duplex) operation only.

S/PO and DISC/ALC are for simplex and semi-duplex operation. The S/PO selection shows received signal strength and transmitter power output in all modes. The DISC/ALC selection, while receiving, also shows S-units in SSB and CW modes, but in the FM mode the meter indicates discriminator center tuning. While transmitting with the DISC/ALC selection, the meter shows ALC (automatic level control voltage) in SSB and CW modes, and relative power output in FM.

(25) PREAMP Button

This button switches +13V DC (max 300 mA) at the ANT jacks during reception, to control a masthead preamplifier (not supplied).

(26) Small Controls

VOX GAIN, DELAY & ANTI-TRIP

These controls set the automatic voice-actuated transmit/receive switching in SSB and FM modes; and semi break-in keying in CW mode. Adjustment details are in the Operation chapter.

KEYER SPEED

Adjusts the speed of the optional internal electronic CW keyer, if installed.

(27) AGC and SAT Selectors

AGC

Selects the desired receiver AGC decay time in SSB and CW modes: fast, medium or slow.

SAT (Full Duplex Satellite Operation)

OFF: satellite operation disabled

Note: "SAT" is displayed in orange when this selector is set to any position except OFF.

RX: receiving (downlink) frequency is displayed and tunable, transmit frequency is fixed and not displayed.

TX: transmit (uplink) frequency is displayed and tunable, receive frequency is fixed and not displayed.

NOR: receiving (downlink) frequency is displayed, vfos track together in same direction when tuning.

REV: receiving (downlink) frequency is displayed, vfos track in opposite directions when tuning.

## 2.2 TOP PANEL SWITCHES

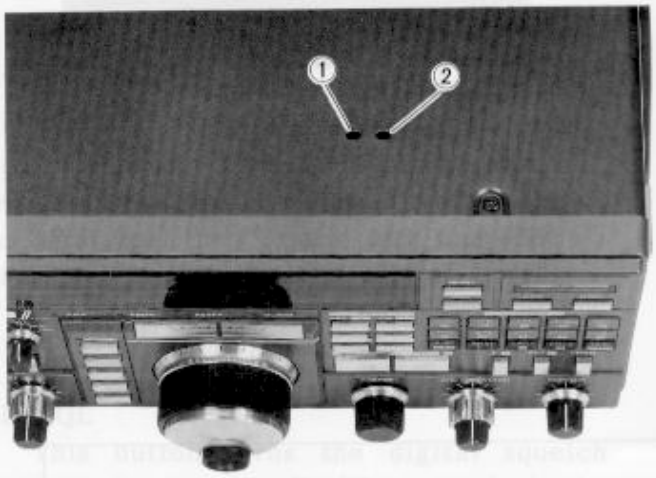


(1) Memory Backup

Accessible through this hole is a miniature slide switch which disconnects the lithium backup battery. When the front panel POWER switch is off, sliding this switch to the left for 30 seconds clears all memories (including vfos), and resets the microprocessor.

(2) 2-Meter Automatic Repeater Shift

Accessible through this hole is a miniature slide switch which disables the Automatic Repeater Shift feature. When enabled, this feature causes the transmit frequency to be automatically offset by a preprogrammed amount (default 600 kHz) from the receive frequency when tuned to the repeater input subband of the 144 MHz band. Move this switch to the left to disable this feature. When disabled, repeater shift can still be selected manually with the +/-RPT functions (of the MODE buttons).

## 2.3 REAR PANEL JACKS & SWITCHES

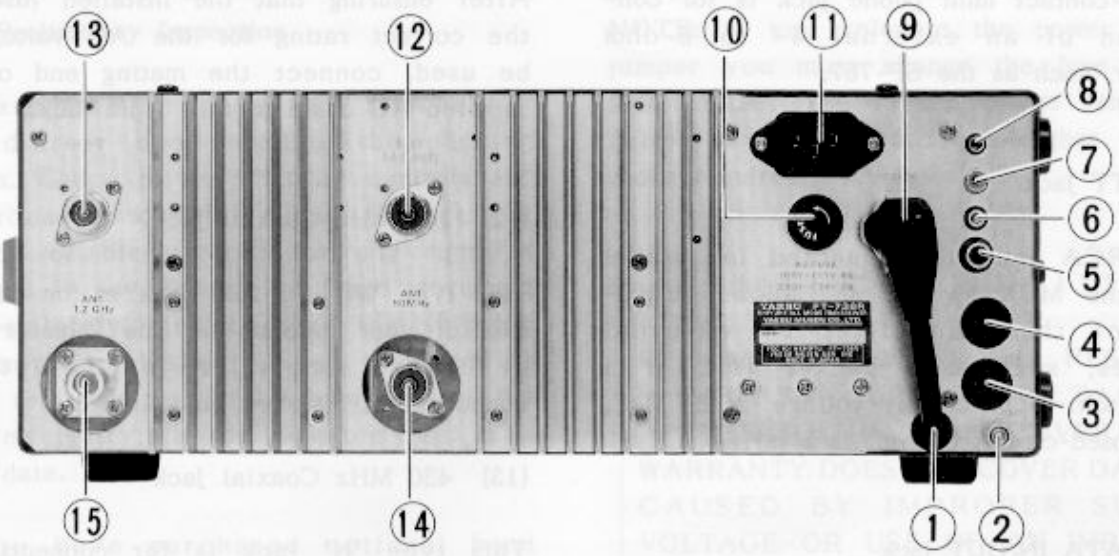


### (1) DC Output Cable Pigtail

This cable provides 13.8V DC at up to 8A from the internal switching power supply. Normally, to operate the transceiver from the AC mains, this cable must be connected to the 13.8VDC jack.

### (2) GND Terminal Post

Connect this terminal to a good earth ground using heavy braided cable.

### (3) CAT DIN Jack

This 6-pin jack provides serial I/O connections for external computer control. Data rate is 4800 bits/sec, TTL level.

### (4) STBY DIN Jack

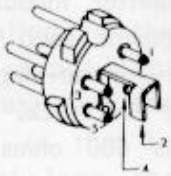


This 5-pin jack provides transmit/receive switching lines for controlling external transmitter amplifiers. Pinout is determined by Band Module Installation (§3.7).

### (5) KEY Jack

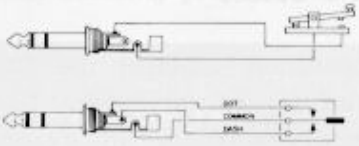

This ¼-inch, 3-contact stereo jack accepts a CW key or keyer paddles (for the optional internal electronic keyer), or your external electronic keyer. DO NOT USE A 2-CONTACT PLUG in this jack. Pinout is shown above. Key up voltage is 4.5V, and key down current is 2 mA.

(6) EXT SPKR (External Speaker)

This 2-contact mini phone jack is for connection of an external 4- to 8-ohm speaker, such as the SP-767.

(7) PTT Jack

This RCA jack is connected in parallel with the MOX switch, and allows activation of the transmitter by external devices, such as a packet TNC or a footswitch. Open-circuit voltage is 8V DC, and closed-circuit current is 8 mA.

(8) DATA IN/OUT Jack

This 3-contact mini stereo jack allows direct connection to the FM receiver demodulator and FM transmitter modulator, for digital terminal equipment such as a packet radio TNC. No pre- or de-emphasis is added to the signals at this jack. Input impedance (ring contact) is 600 ohms (for FM mode only) and input signal level should be 30 mVrms. Output (tip contact) level is 200 mVrms maximum at 10 kilohms.

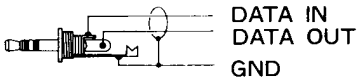


(9) 13.8VDC Socket

For AC operation, connect the DC supply cable pigtail (1) to this jack. To operate the transceiver from an external DC source, connect your 13.8V DC supply here. The supply must be capable of at least 8 Amperes continuous load.

(10) FUSE Holder

For 100 - 117 VAC operation, install a 4A fuse here. For 200 - 234 VAC operation install a 2A fuse.

(11) AC Jack

After ensuring that the installed fuse has the correct rating for the AC voltage to be used, connect the mating end of the supplied AC cable to this 3-pin jack.

(12) 144 MHz Coaxial Jack

This type 'M' (SO-239) jack is for connection of your antenna for the 2-meter band or linear amplifier input. Optimum impedance is 50 ohms, unbalanced.

(13) 430 MHz Coaxial Jack

This type 'N' jack is for connection of your antenna for the 70-centimeter band, or linear amplifier input. Optimum impedance is 50 ohms, unbalanced.

(14) 50 MHz or 220 MHz Coaxial Jack (Optional)

This type 'M' (SO-239) jack is present only if the optional 50 MHz or 220 MHz band modules are installed. Connect your antenna for the 6-meter or $1\frac{1}{4}$-meter band (respectively), or linear amplifier input. Optimum impedance is 50 ohms unbalanced.

(15) 50/220 MHz or 1.2 GHz Coaxial Jack (Optional)

If the 1.2 GHz band module is installed, it must be in this location. Otherwise the 50 or 220 MHz band modules may be installed here. The 1.2 GHz module has a type 'N' jack, and the 50/220 MHz modules have a type 'M' (SO-239) jack. Connect your antenna or linear amplifier for the appropriate band. Optimum impedance is 50 ohms, unbalanced.

## Section 3. INSTALLATION

### 3.1 Preliminary Inspection

Inspect the transceiver thoroughly immediately upon opening the packing carton. Check to see that all controls and switches work freely, and inspect the outside of the cabinet for any signs of damage. If any damage is found document it completely, and contact the shipping company (or dealer, if you purchased it over the counter) right away. Save the packing materials for possible use at a later date.

If you have purchased optional band modules or other internal options that are not yet installed, see §3.5 to install them before proceeding.

### 3.2 Power Connection

Before connecting power, if using AC, check the AC voltage label on the rear panel, to make sure that it matches your local line voltage. The switching supply in the FT-736R may be wired for operation from 85 to 132 VAC or 170 to 264 VAC. If your mains voltage is not within the range of the label, the power supply range jumper must be relocated as shown below, and the fuse must be changed. Make sure to change the label if you change the power supply range.

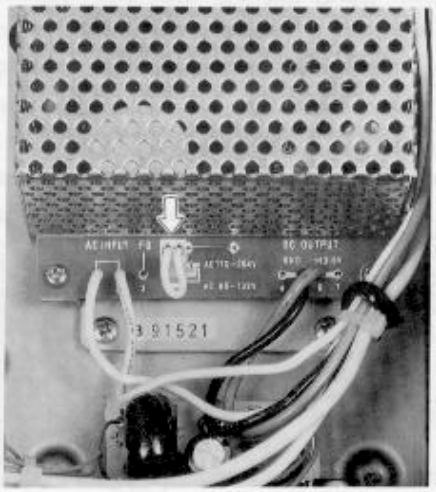

NOTE: if you relocate the power supply jumper you must change the fuse in the fuse holder. The lower voltage range requires a 4A fuse, and the higher voltage range requires a 2A fuse.

**! ! ! ! ! ! CAUTION ! ! ! ! ! !**

PERMANENT DAMAGE WILL RESULT IF IMPROPER SUPPLY VOLTAGE IS APPLIED TO THE TRANSCEIVER. YOUR WARRANTY DOES NOT COVER DAMAGE CAUSED BY IMPROPER SUPPLY VOLTAGE OR USE OF AN IMPROPER FUSE.

After making certain the AC label matches your line voltage, and the correct fuse is installed in the fuse holder, connect the DC output cable pigtail to the 13.8VDC socket, and then connect the AC power cord to the 3-pin AC jack on the rear panel (see the photo below). Do not connect the other end of the power cord to the wall outlet until all other transceiver interconnections have been made.

If using an external DC supply, it must be capable of 8 Amperes continuous load. Connect it to the 13.8VDC socket on the rear panel, ensuring proper polarity.

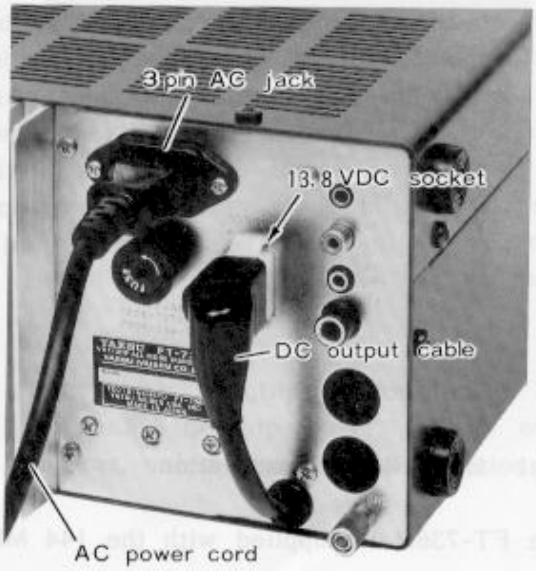

### 3.3 Transceiver Location and Grounding

A primary consideration in setting up the FT-736R is providing for adequate ventilation around the top and rear of the cabinet. Do not place the transceiver on top of another heat-generating device such as a linear amplifier, and do not place equipment, books or papers on top of the transceiver. Avoid heating vents and window locations that could expose the transceiver to excessive direct sunlight, especially in hot climates.

Connect the GND terminal on the rear panel to a good earth ground, using a heavy braided cable of the shortest length possible. All other station equipment should be connected to the same grounding cable, as close together as practical. If you use a computer with or near the FT-736R, you may need to experiment with ground wiring to suppress computer noise in the receiver.

### 3.4 Antenna Considerations

The type of antenna to use depends on the purpose of your communications. For example, antennas for FM operation are generally vertically polarized, while antennas for CW and SSB are horizontally polarized for terrestrial communications, and circularly polarized for satellite communications. You may, of course, use any of these types interchangeably, but performance will be diminished if you do not follow these customary practices. Any antennas that you use should be designed to provide 50 ohms impedance on the operating band. For specific information, consult your favorite amateur radio handbook, and talk to your Yaesu dealer.

### 3.5 Installation of Options

#### 3.5.1 Band Module Installation

The FT-736R is supplied with the 144 MHz and 430 MHz band modules already installed in the two upper compartments. Up to two additional band modules may also be installed, in the lower compartments.

Note in the next diagram that the 1.2 GHz module may be installed only in the lower left corner (when viewed from the rear). The 50 and 220 MHz modules may be installed in either lower compartment.

| | |
|---|---|
| 430 MHz | 144 MHz |
| 50/220MHz/1.2GHz | 50/220 MHz |

(1) Remove all connections from the jacks on the rear panel, and then remove the two screws in the carrying handle and the eight screws affixing the top and bottom covers. Remove the handle and covers, and place the transceiver upside-down on the workbench.

(2) Locate the gray rubber thermal pad supplied with the Band Module, and the four machine screws. After confirming the correct location for the Module, insert the machine screws from the rear through the four holes in the heatsink and then through the holes in the thermal sheet.

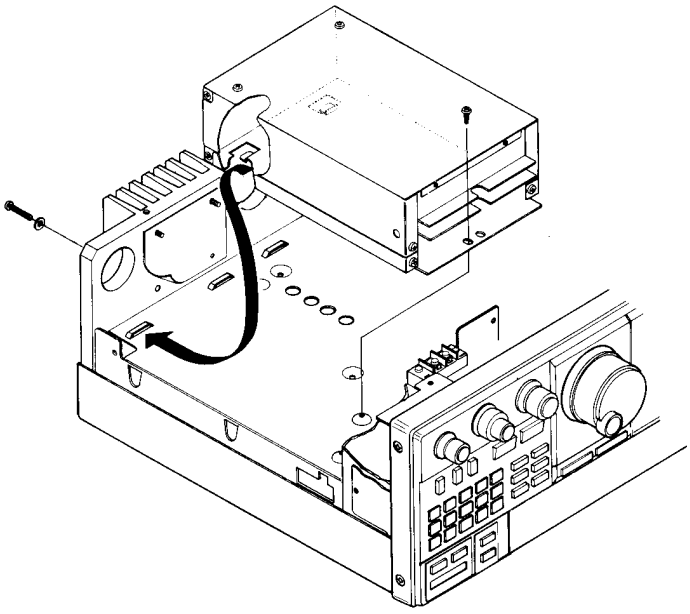

(3) Carefully slide the Band Module into place so that the mounting feet on the Module fit into their slots in the chassis.

(4) Tighten the four machine screws, and install one self-tapping screw (for 50 or 220 MHz modules: two for the 1.2 GHz module) through the hole(s) near the front of the module into the chassis.

(5) Loosen the two front panel mounting screws on each side, and fold the front panel upwards.

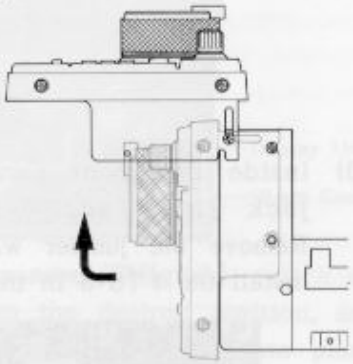

(6) Connect the single red wire to either of the terminals on the terminal block.

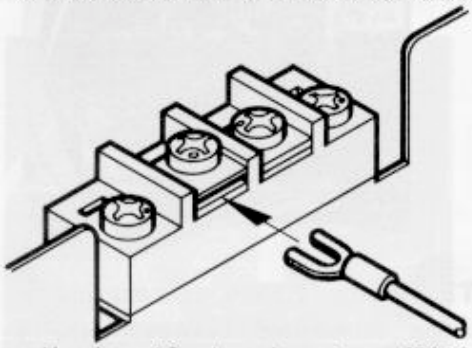

(7) Install the 13-pin plug into J5010 or J5011, and the 10-pin plug into J1005 or J1006. Now make a note of which band modules are connected to J5010 and J5011. You will need this information when connecting a masthead preamp (§3.6) or an external power amplifier (§3.7).

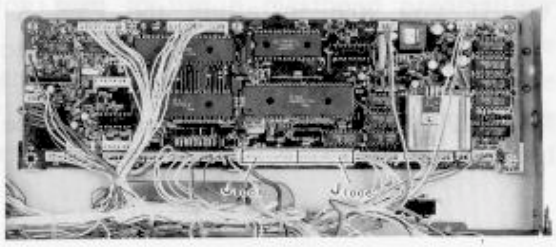

(8) If you are installing other options, proceed to the appropriate sections below. Otherwise, fold the front panel back into place, tighten its screws, and replace the covers and carrying handle.

3.5.2 Keyer Unit Installation

(1) Remove the eight screws affixing the top cover, and remove the cover.

(2) Locate 8-pin connector P4001 on the TX Board.

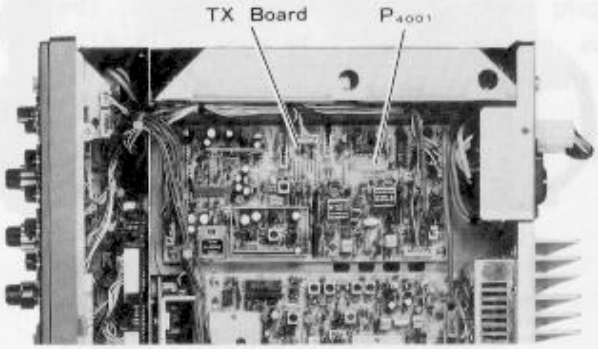


(3) Cut the twisted jumper wire near P4001.

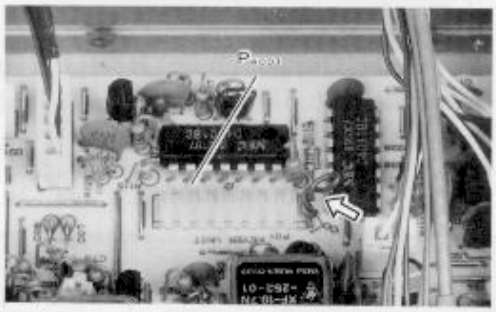

(4) Insert the Keyer Unit into P4001.

(5) Replace the top cover and its eight screws, unless installing other options.

### 3.5.3 CW Narrow Filter Installation

(1) Remove all interconnections from the rear panel, and then remove the two screws in the carrying handle and eight screws affixing the covers. Remove the handle and covers, and place the transceiver left side up on the workbench.

(2) Remove the six screws affixing the RX IF Unit at the left side of the chassis, and carefully fold the board away to allow access to the solder side.

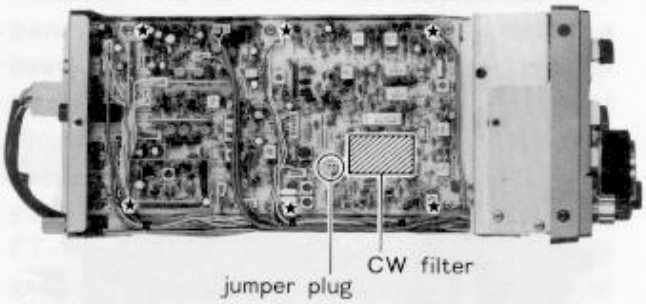


(3) Insert the four filter leads into their holes, and solder them into place (polarity is not important).

(4) Move the jumper plug indicated below from the WI[de] to the NA[rrow] pins.

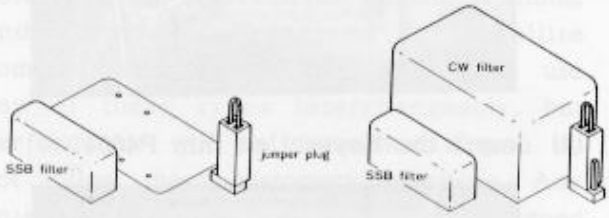


(5) Replace the RX IF Unit and its six screws (using care not to pinch any wires). If installing other options, proceed to the next paragraph. Otherwise, replace the covers and carrying handle, and their screws.

### 3.5.4 Tone Squelch Unit Installation

(1) Perform step (1) of the CW Narrow Filter Installation, at right. Set the transceiver top side up.

(2) Loosen the two front panel mounting screws on each side, and fold the front panel down.

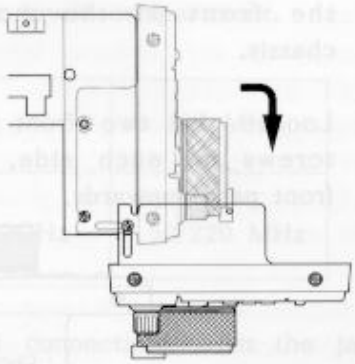

(3) Inside the front panel, locate 8-pin jack J1019 and 6-pin jack J1020. Remove the jumper wire in J1020, and install the FTS-8 in these two jacks.

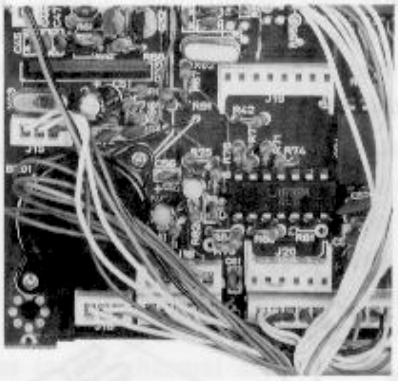

NOTE: if the FTS-8 is removed a jumper must be reinstalled between pins 4 and 5 of J1020.

The output level of the Tone Squelch Unit has been preset at the factory, but may be realigned by adjusting the trimmer potentiometer on the FTS-8 (as described in the FT-736R Technical Supplement).

(4) If you are installing the FVS-1A proceed to step (3) of the next section. Otherwise, fold the front panel back up, tighten its screws, and replace the covers and carrying handle.

3.5.5 FVS-1A Voice Synthesizer Installation

(1) Perform step (1) of the CW Narrow Filter Installation on page 18, and set the transceiver top side up.

(2) Perform step (2) of the Tone Squelch Unit Installation on page 18.

(3) Inside of the front panel behind the keypad, locate the unconnected 10-pin jack, and connect the FVS-1A here.

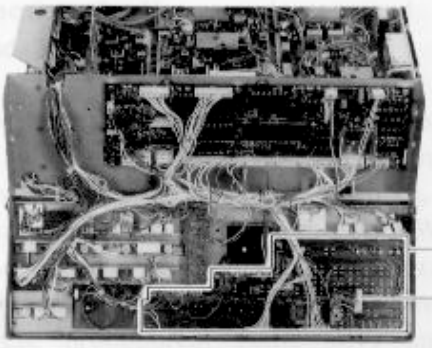


(4) Set the JA[panese]/EN[glish] switch on the FVS-1A to the desired position, and then affix the FVS-1A board into place using the double-sided adhesive tape on the flat surface of the FVS-1A IC.

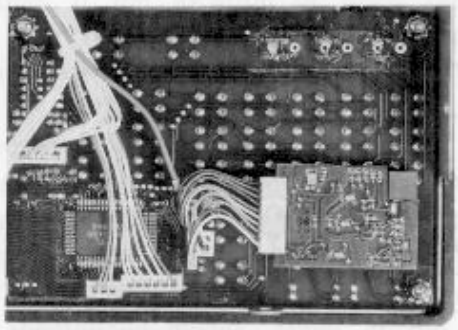

(5) Fold the front panel back into place, tighten its screws, and replace the covers and carrying handle.

### 3.6 Preamp Jumper Installation

If you plan to use a masthead preamplifier (not supplied), you will need to install one of the supplied jumper plugs to provide 12V DC (at up to 300mA) across the antenna jack of the corresponding band module. Note that the proper place to install the jumper for 50 MHz, 220 MHz or 1.2 GHz depends on which AF Unit jacks (nos. J5010 or J5011) were used in the Band Module Installation (§3.5.1):

Install a jumper plug on J5016 to activate a preamp for the Band Module connected to jack J5010.

Install a jumper plug on J5017 to activate a preamp for the Band Module connected to jack J5011.

Since the 144 and 430 MHz modules are already installed, just put a jumper plug on J5018 to activate a 144 MHz preamp, or on J5019 to activate a 430 MHz preamp.

The diagram on the next page shows the preamp supply switching circuitry.

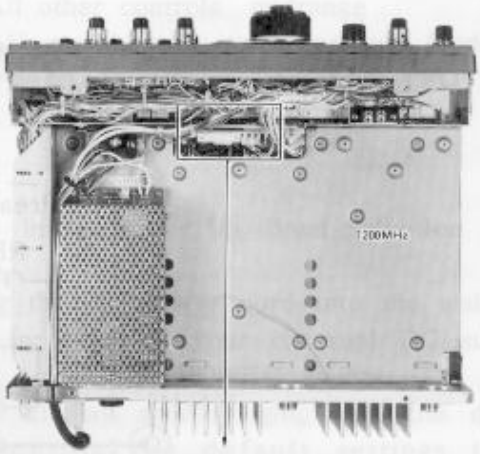

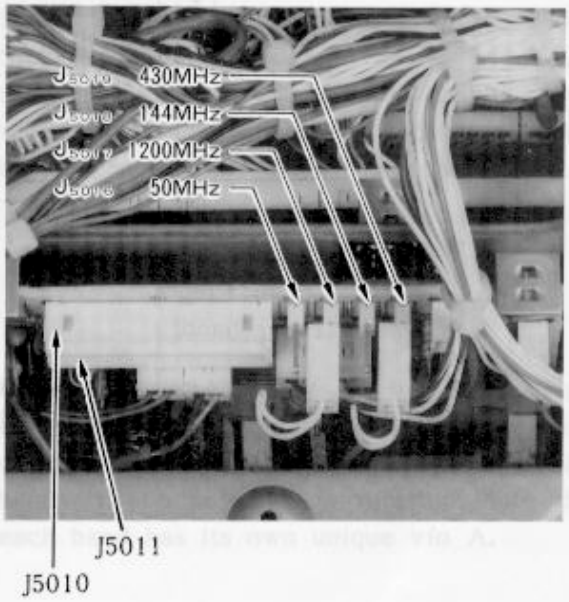

### 3.7 RF Power Amplifier Connections

The STBY jack on the rear panel provides access to ground-on-transmit relay contacts in the transceiver. Connect your amplifier "Ground to transmit" line to the pin indicated in the following chart (and connect pin 1 to the amplifier chassis ground):

| Amplifier Band | STBY pin |
|---|---|
| 430 MHz | 2 |
| Band Module at J5011 | 3 |
| 144 MHz | 4 |
| Band Module at J5010 | 5 |

### 3.8 Memory Backup

When the transceiver is switched off, the memories are retained by a lithium cell inside the transceiver. After five or more years of operation the transceiver may fail to retain memories, at which time the lithium battery should be replaced. Contact your dealer for replacement of the battery.

PREAMP SWITCHING CIRCUITRY

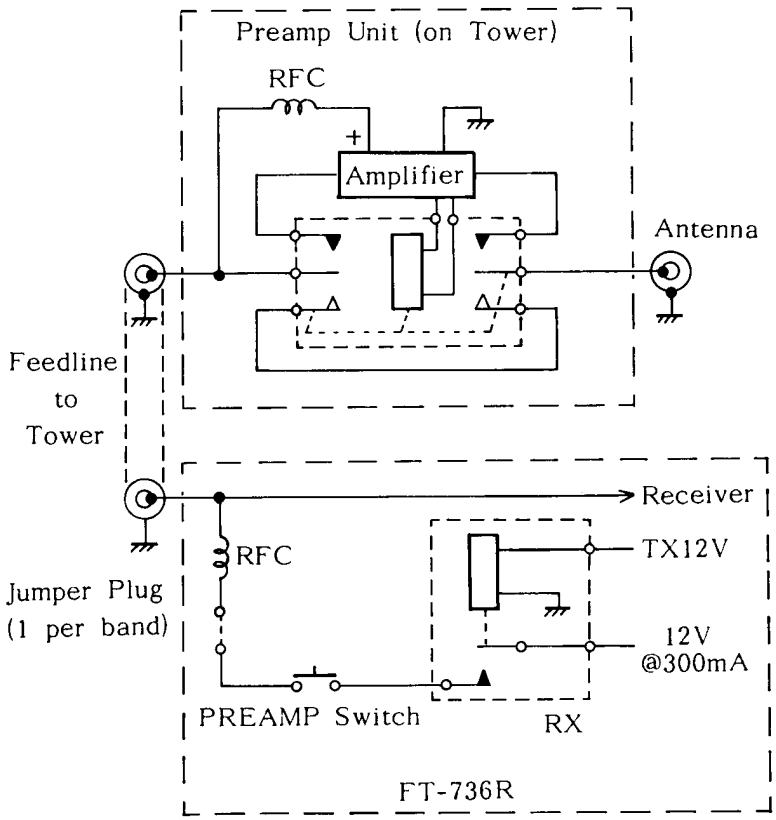

## Section 4. OPERATION

This section describes the operating features, beginning with step-by-step details needed for basic operation. For these to work as described you must perform each step in the order given, from the start. We assume you have already read Section 2, and are familiar with the locations and basic functions of the controls and switches; and that the transceiver has been installed as described in Section 3. If not, please read Sections 2 and 3 now.

Subsections 4.8 through 4.13 describe some of the more complex operating features involving programmable features, memories, scanning and tone squelch. We do not recommend random experimentation with the controls until after you have followed these procedures. Some keys and switches alter or disable other functions and may cause confusion: you may have to turn the transceiver off and set the backup switch (§2.2(1)) off and back on to reset the microprocessor if you loose track of operation. If the location or basic function of a particular control or switch is unclear, refer back to Section 2.

Subsections 4.14 through 4.16 offer some suggestions for implementing features in standard applications, while the remaining subsections give brief information on using the FT-736R for satellite, packet, ATV and other specialized modes. Many of the comments and procedures in these sections are intended to guide your own experimentation, rather than to serve as a last word on the best way to operate. Ultimately it is up to you to determine the features and techniques suiting your own station setup and operating preferences.

### 4.1 Preliminary Steps

Before plugging the power cord into the wall outlet, double check that the AC voltage label on the rear panel is correct for your line voltage, and that the DC cable pigtail (or other DC supply) is plugged into the 13.8VDC socket. Set the front panel power switch to the OFF (undepressed) position.

Connect a microphone, if desired, to the MIC jack. For CW operation, connect your CW key or keyer paddles to the KEY jack.

Preset the front panel controls:

MIC, DRIVE, SQL, AF: counterclockwise
RF: fully clockwise
All other controls midrange
All pushbutton switches out (undepressed), except for the "A" VFO button (above the AF/RF control).

### 4.2 Initial Power Up, Band Selection

Plug the AC power cord into the wall outlet (or turn on your external DC supply), and press the POWER switch. The meter and display should light, with the display indicating the default settings if the transceiver has not been used before: USB (upper sideband mode), VFO-A, 144.000.00 (MHz). If the display is too bright, press the DIM button (center of the silver pushbuttons on the left half of the panel).

Press the BAND key at the lower right corner of the keypad and watch the band changes on the display. Each installed band will be selected in rotation: note that each band has its own unique vfo A.

→50MHz* → 144MHz → 430MHz → 1200MHz*

* optional

Press the MH/CH down and up keys (to the immediate right of the tuning knob), one at a time. The displayed vfo frequency steps down and up in 1 MHz steps (10 MHz steps on the 1.2 GHz band).

### 4.3 Mode Selection

The MODE keys below the right side of the display allow quick selection of mode. LSB and USB are referred to collectively as "SSB modes" in this manual.

Adjust the AF control (inner knob to the left of the tuning knob) for comfortable audio volume, and the TONE control (outer knob, to the left of the AF control) for comfortable tone from the loudspeaker.

### 4.4 Tuning Methods

Aside from band selection and the 1 MHz giant steps just mentioned, there are four ways to tune the vfos: the main tuning knob, the large DOWN/UP keys just above the tuning knob (and the microphone dwn/up keys, which act the same), and the CHANNEL knob below and to the right of the main tuning knob. Try each of these.

Tuning steps for each method are determined by mode, and are also selectable by the STEP key (center left side of the keypad) and by the FM CH and SSB CH switches left of the tuning knob. Refer to the table at the bottom of the page while reading the following descriptions.

(1) Main Tuning Knob

In CW and SSB modes, the main knob tunes in either 10 or 100 Hz steps, selectable by the STEP key. In FM modes, the main knob tunes in 100 Hz steps. Tuning rate is about 1000 steps/turn.

Note that the D LOCK, FM CH and SSB CH switches to the left of the main tuning knob disable it. D LOCK is for intentionally locking the knob when you want to avoid accidental frequency changes. FM CH and SSB CH disable the knob in their respective (FM, and SSB or CW) modes, while activating the CHANNEL knob for channelized tuning.

(2) CHANNEL Knob

In SSB and CW modes with the SSB CH switch depressed, this knob tunes in 2.5 or 5 kHz steps, toggled by the STEP key. In FM modes with the FM CH switch depressed, this knob tunes in programmable 5, 10, 12.5, 15, 20, 25, 30 or 50 kHz steps. Step programming is described in §4.8.

VFO TUNING STEPS PER MODE

| | Main Knob | DOWN/UP Keys | CHANNEL Knob |
|---|---|---|---|
| SSB/CW | | | |
| Normal** | 10/100 Hz | 10/100 Hz | disabled |
| SSB CH | disabled | 2.5/5 kHz | 2.5/5 kHz |
| FM | | | |
| Normal | 100 Hz | 100 Hz | disabled |
| FM CH | disabled | programmable* | programmable* |

* programmable to 5, 10, 12.5, 15, 20, 25, 30 or 50 kHz

** Normal means neither the SSB CH nor FM CH switches are on

(3) DOWN/UP Keys (above Tuning Knob)

The DOWN/UP keys tune in the same steps as the main knob if neither the FM CH nor SSB CH switches are on. Note however, that the display resolution is 100 Hz, so the display changes only once every ten key hits when 10 Hz steps are selected (in SSB or CW modes).

If the FM CH or SSB CH switches are on, these keys tune in the same steps as the CHANNEL knob, described above.

If you press the DOWN or UP key for more than ½-second, scanning starts. Press either key again to stop scanning. Scanning is described in detail later.

### 4.5 Keypad Frequency Entry

Aside from the above tuning methods, you can key in a desired frequency directly using the ten numbered light gray keys (upper two rows of the keypad) and the silver ENT button below the keypad.

First press the ENT key once to activate numeric entry. The MHz digit (or 10 MHz digit on 430 and 1200 MHz bands) starts blinking, and the digits to the right clear to zero. You can now 'edit' a new frequency on the display (while reception continues on the original frequency).

While a display digit is blinking, press any of the light gray keys to change the blinking digit to the number on that key. The next digit to the right will begin to blink. Press ENT again to end editing and QSY to the displayed frequency.

EXAMPLE: QSY to 435.2500 MHz

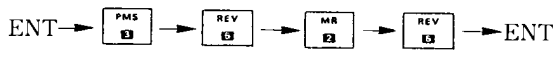


Notice that you do not have to key in all digits - trailing zeros are automatically added when you press ENT to accept the display. If you try to enter an out-of-band frequency, a double beep will sound when you press ENT again, and the new frequency will be rejected (try it).

If you press ENT to begin editing, and then change your mind and want to return to the original frequency, you can cancel the edit display (while a digit is still blinking; that is, before you press ENT again) by pressing the RESET key (at the right end of the display).

### 4.6 Controls for Enhancing Reception

The functions described so far allow you to receive any signal within the range of the FT-736R, in any mode. This section describes features that allow you to tailor the receiver to the mode in use and existing band conditions.

#### 4.6.1 Squelch

The squelch works in all modes, but you will probably prefer to keep it closed to eliminate background noise during FM reception, and open when listening for weak signals in CW and SSB. However, for scanning, the squelch must be set so that it is closed (silent) on a clear channel. Select FM now, and turn the SQL control clockwise just to the point where background noise is silenced on a clear frequency. If you set the SQL further clockwise, weak signals will not be heard.

#### 4.6.2 Noise Blanker

The noise blanker is activated by the NB switch immediately to the left of the tuning knob (the green indicator lights when it is on). When pulse type noise is

encountered on the receiving frequency in SSB or CW modes, press the NB switch to activate the blanker. For best performance, always turn the noise blanker off when it is not needed. It is disabled during FM operation.

### 4.6.3 RF Gain Control

The RF gain control (outer knob on the same shaft as the AF control) allows manual setting of the gain of the early stages of the receiver on the 50, 144 and 220 MHz bands. In CW and SSB modes, the gain of these stages is also controlled automatically by AGC (§4.6.6) so the RF gain is usually kept fully clockwise for maximum gain, unless strong signals cause interference.

### 4.6.4 IF Passband Shift

In SSB and CW modes, the location of the IF passband relative to the (displayed) receiving frequency can be adjusted by the SHIFT control (inner knob to the right of the CHANNEL knob). Think of this control as a sliding window adjustment, which allows the receiving passband (window) to be slid back and forth, providing different views of the receiving frequency.

Normally, the SHIFT control is kept in the 12 o'clock position until a desired signal has been tuned in. If the signal is being interfered with by another signal on an adjacent frequency, the SHIFT control can be adjusted to the left or right to move the passband window farther from the interference. Notice also that the audio tone characteristics of the receiver change.

**Note:** Before adjusting the SHIFT control, make sure the NOTCH filter is switched off. Also, return the SHIFT control to the 12 o'clock position when retuning.

### 4.6.5 IF Notch Filter

The IF notch filter is used to suppress carrier heterodyne interference in SSB and CW reception. The notch is activated by the switch of the same name to the left of the tuning knob, and adjusted by the inner knob of the middle control at the bottom right. While activated, the indicator next to the NOTCH switch glows green.

Activate the notch filter only after the desired signal has been tuned in and the SHIFT control has been adjusted for minimum adjacent-channel interference (if needed). Press the NOTCH switch and adjust the control gradually back and forth to find the point where the unwanted heterodyne suddenly drops. If the heterodyne level is stronger than the desired signal, the S-meter indication will dip when the notch is properly set. Turn the notch switch off before tuning to a new frequency or adjusting the SHIFT control. See also §4.14.3.

### 4.6.6 AGC (Automatic Gain Control)

In SSB and CW modes, you can select the AGC decay rate that provides the most comfortable reception (minimum fading or pumping of receiver gain between syllables), using the three-position AGC selector (small knob, second from the right, next to SAT). Usually, for SSB, this will be the 'S' (Slow) position, but when signals are fluttering, or when looking for a weak signal you may find 'M' (Medium) or 'F' (Fast) better, at least until you make contact. For CW, the Medium or Fast positions will be helpful at higher speeds or under noisy conditions with weak signals.

## 4.7 Transmitter Operation: General

At this point you are probably ready to try out the transmitter. Recall that you should be using an antenna designed for the bands on which you wish to operate.

**Do not transmit without a proper antenna!** (See §3.4 for antenna considerations.)

### 4.7.1 FM Transmission

For FM transmission, just select the FM mode and close the PTT switch to transmit. Use the PO function of the meter to observe power output, and adjust the DRIVE control to set your power level as desired. Maximum power output is about 25 watts on the 144, 220 and 430/440 MHz bands ('8' on the PO meter scale), and 10 watts on the 50 MHz and 1.2 GHz bands (with the optional Band Modules installed).

The MIC gain control sets the deviation level during FM transmission: while speaking into the microphone, watch the green BUSY indicator (between the meter and display) and set the MIC gain so that the indicator just glows on voice peaks.

You can also use the VOX system to automatically control transmitter keying, as described on the next page.

If working through repeaters that require a Burst tone, you can either press the BURST switch to turn on automatic Burst transmission each time the PTT switch is pressed, or you can press the T CALL button to manually transmit a Burst tone at any time (for as long as you press the button).

If the optional FTS-8 CTCSS Unit is installed, after setting the tone frequency as described in §4.13, press F+USB[ENC] if you require a CTCSS tone.

You can activate standard repeater splits by pressing F+LSB[+RPT].

When you transmit, the subaudible tone will be sent along with your voice. See §4.11 for details of split frequency selection.

### 4.7.2 SSB Transmission

With a microphone connected to the MIC jack on the front panel, ensure the following controls are preset as indicated:

METER selector . . . . DISC/ALC
MIC gain control . . . 12 o'clock
(inner knob right of the MIC jack)
DRIVE . . . . . fully clockwise
PROC switch . . . . . OFF (out)
(left side of panel, third from left)
VOX switch . . . . . OFF (out)
(to the right of the MOX switch)
MODE switches . . . . press LSB or USB

Tune to an SSB frequency.

To activate the transmitter, close the PTT switch on the microphone, and watch the ALC indication (blue scale) on the meter while speaking into the microphone. Adjust the MIC gain control, if necessary, so that the meter does not deflect beyond the ALC zone (heavy blue line on the scale) on voice peaks.

**SSB Speech Processor**

If you need some extra punch when working weak SSB stations, activate the RF speech processor by pressing the PROC switch, and reduce the DRIVE setting, if necessary, to keep the meter reading within the ALC zone. This does not reduce your power output, but prevents distortion.

**VOX** (Voice-actuated T/R Switching)

In FM and SSB modes you can activate the VOX system to automatically key the transmitter when you speak. Just turn the VOX GAIN control (next to the POWER switch) clockwise, and adjust it so that the transmitter just keys when you start speaking (without pressing the PTT switch on the microphone). When you stop talking the transceiver should return to receive after a slight delay.

The VOX DELAY control (to the right of the GAIN control) sets the hang time for VOX switching from transmit to receive: adjust it so that the transmitter just stays on between speech syllables. The ANTI-TRIP adjustment should be set so that receiver audio from the loudspeaker doesn't key the transmitter.

**Clarifier** (Receiver Offset Tuning)

While in contact with another station, you can retune the receiver (if, for example, his transmitter drifts) without changing your transmitting frequency: while receiving, press the CLAR key at the bottom left corner of the keypad. 'CLAR' (Clarifier) will appear to the left of the receiving frequency on the display, and the main tuning knob will be activated to allow tuning the receiver up or down 10 kHz from the original receiving frequency.

Once the clarifier has been tuned, the new frequency is stored in the clarifier even if it is turned off (by pressing CLAR again). Pressing CLAR again later on the same band recalls the last clarifier setting on that band (there are actually up to four clarifier memories: one for each band).

Remember to press the CLAR key again to return the receiver to the original (fully tunable) frequency when your QSO is finished.

**4.7.3** CW Transmission

An internal electronic keyer is available as an option for the FT-736R, which can be used by connecting keyer paddles to the KEY jack (§2.3(5)). You can also use a straight key or an external electronic keyer, in which cases the internal keyer, if installed, must be switched off. Set up the following controls:

MODE switches: press CW
DRIVE control: fully clockwise (max)
VOX GAIN control: clockwise, anywhere out of the OFF click-stop
METER selector: DISC/ALC

Also, if using keyer paddles and the internal keyer, press the KEYER switch (above MIC/DRIVE). Otherwise, with a straight key or external keyer, make sure the KEYER switch is OFF (out).

With the controls set as above, you are ready for semi break-in operation. When you close the key the transmitter will be activated, and when you release the key the transceiver will return to receive after a slight delay (set by the VOX DELAY control above the KEYER switch).

Set the MONITOR control so that you can hear the sidetone from the loudspeaker (or headphones) when you close the key.

To set keyer speed (and to practice CW sending), set the DRIVE fully counter-clockwise and the VOX GAIN into the OFF clickstop. Now when you close the key the sidetone will be heard, but no signal will be transmitted. Adjust the KEYER SPEED control for the desired speed.

While transmitting, set the METER selector to DISC/ALC and note the indication on the ALC scale of the meter. If the meter deflects farther than the ALC zone reduce the DRIVE control setting (reduce it further if you want to reduce output).

### 4.8 Programmable Tuning Steps

Tuning (and scanning) steps between 5 and 50 kHz can be programmed by the operator for channelized FM operation. Programmable steps are active when tuning with the CHANNEL knob and the main DOWN-/UP keys above the tuning knob, or by the microphone UP/DWN buttons. The default step size is either 5 or 12.5 kHz (see the Model Chart on page 4).

To reprogram FM channelized tuning steps;

(1) Select the FM mode, and press the STEP key. The current step size is displayed.

(2) Press one of the keys [1] through [8] to set the tuning/scanning steps as follows:

| Key | Step (kHz) | Key | Step (kHz) |
|---|---|---|---|
| [1] | 5 | [5] | 20 |
| [2] | 10 | [6] | 25 |
| [3] | 12.5 | [7] | 30 |
| [4] | 15 | [8] | 50 |

The new step selection is displayed for a second when selected.

### 4.9 Memory Operation

One hundred general purpose memory channels, numbered 00 through 99, are available for storing operating frequency and mode of emission from the vfos. Also, on each band there is a call channel memory (CALL 2) and two subband limit memories for PMS operation.

#### 4.9.1 Memory Storage

The following procedure describes storage of the displayed vfo data into one of the memory channels, without interrupting operation on the vfo (keystrokes can only be entered while receiving).

(1) Select the desired mode, and tune the vfo to the frequency to be stored (you can also store standard or odd repeater shifts and tone squelch settings, as described later).

(2) Press the F button (below the keypad) to check the memories: the display will change to the last memory channel accessed (or CH 01 by default). The memory number and a small "CH" will appear blinking, to the right of the operating frequency display.

(3) While watching the displayed memory number, turn the CHANNEL knob (or press the MHz/CH keys) to select the memory number to store.

(4) Press the F button again to write the displayed data to memory. Operation returns to the vfo.

After step (2) you have no more than five seconds between keystrokes (or turning the CHANNEL knob). If you time out from inactivity, the blinking part of the display disappears, and operation returns to the vfo without storing the memory. Memory recall is described in §4.9.2.

CAUTION: Storing a memory overwrites all data previously stored in that memory.

##### 4.9.1.1 CALL Channel Memories

In addition to the 100 general purpose memories, you can store frequencies in the special CALL channel memories for instant recall with a single keystroke. These are stored in the same way as just described for other memories, except that you merely press either the CALL1 or CALL2 key in step 3. The memory will be

instantly stored and operation return to the vfo: step 4 is unnecessary.

CALL1 is the global memory that can be stored and instantly recalled from any band, allowing quick cross-band QSY.

CALL2 is a band-specific memory: there is actually one CALL2 memory for each installed band. Pressing CALL2 always recalls the memory on the same band as the vfo or regular memory that you are currently receiving on, so you can store a CALL2 memory for each band. For example, if you have the 50, 144, 220 and 430 MHz band modules installed, you could store four different CALL2 memories. Then, pressing CALL2 would recall the CALL2 memory stored for the band you are operating on (whereas pressing CALL1 always recalls the same frequency, regardless of the band you are operating on).

### 4.9.2 Memory Recall

By default, all memories are empty (only the channel number is displayed when an empty memory is recalled). Of course, you must store data into memories as described above before they can be recalled for operation.

(1) Press the MR key to recall memories: the display changes to the last memory accessed, with the memory number displayed as two (small) digits.

(2) While watching the displayed memory number, you can turn the CHANNEL knob to select from all stored memories, or you can press the main DOWN/UP keys (above the main tuning knob) or the microphone keys to select only those memories that are in the same band.

Note that both of these methods select only memories that have been stored (empty memories are skipped). There are two other ways to select memories in the MR mode: with the MHz/CH buttons and by keypad entry (ENT, followed by two keys to enter the memory number). However, these methods select both stored and vacant memories. The usefulness of this will become apparent later.

The mode of emission of a recalled memory may be changed temporarily by the MODE keys, and the clarifier may be used as described in §4.7.2.

From the Memory Recall mode, press the VFO key to return to the last selected vfo.

### 4.9.3 Changing Memory Data

While a memory is recalled, you can change the frequency and mode data by swapping the memory with a vfo, where the data can be manipulated and restored in memory later, if desired. If the memory was originally stored with an odd split (using both vfos), one of the split vfo selections (RB-TA or RA-TB) must be used for swapping, as described later in §4.11.4.

(1) While receiving on the memory, press the VFO ◪ M key to swap the memory and vfo. The memory data is moved into the vfo and the vfo data is moved into the memory. Operation is now on the same frequency, but from the vfo.

(2) Tune the vfo as desired.

(3) When you wish to recall the previous VFO data, just press the VFO ◪ M key again, and the data will be swapped again.

### 4.9.4 Checking Memories

You can check the contents of memories without disturbing reception by pressing the MCK (Memory ChecK) key, and turning the CHANNEL knob or pressing the MHz/CH buttons. Also, if receiving on a vfo, you can store the operating data into a memory during memory checking, by pressing the VFO►M key. Otherwise, to exit memory checking, press MCK again.

### 4.9.5 Clearing and Hiding Memories

To totally erase a memory you must overwrite it with new data, or reset the memory backup system. However, you can mask a memory from display and operation so that effectively it is erased, except that you will still be able to reactivate (unmask) it if you desire, as long as you don't overwrite new data to that memory.

To mask a memory:

(1) Press MR (if on a vfo), and select the memory with the CHANNEL knob.

(2) Press F+MR within 5 seconds. The display will clear, except for 'MR' and the memory number (followed by 'CH'). You can now use the CHANNEL knob to select another memory, or press VFO to return to the vfo.

To restore a masked memory repeat these steps, but use the MHz/CH buttons instead of the CHANNEL knob to select the (masked) memory on the display (which will be blank except for the memory number, until you press F+MR). The masked data will then be restored.

## 4.10 Scanning

When the squelch control is adjusted to silence the receiver, pressing one of the microphone buttons or the DOWN/UP keys above the tuning knob for ½-second starts the scanner. To stop it, press one of these keys again or the PTT switch momentarily. Try this now on a vfo (press the VFO key first if you see "MR" on the display).

Signals that are strong enough to open the squelch will cause scanning to pause and a beep to sound. Note that the RF (gain) control must be set for the desired sensitivity before adjusting the SQL control, as it affects squelch sensitivity.

The PAUSE switch (above the MIC/DRIVE control) determines the action of the scanner when a signal is found: if undepressed (OFF), scanning pauses on the signal for as long as it is present, plus two seconds after the signal disappears and the squelch closes. If the PAUSE switch is depressed (ON), the scanner pauses for about five seconds on a signal, and then resumes scanning (whether or not the signal disappears). While the scanner is paused, the decimal points in the frequency display blink.

The vfos can be used for scanning an entire band or a subband of your choice, which we call PMS (Programmable Memory Scanning), described in §4.10.2.

The memories offer a much wider variety of scanning choices, described next.

### 4.10.1 Memory Scanning

Once you have stored some memories you can scan them in a variety of ways, depending on your operating requirement at the moment.

(1) Set the SQL control so that background noise is just silenced.

(2) Press MR, if necessary, to select memory recall ('MR' should be

displayed at the left side of the frequency), and use the CHANNEL knob to select any memory in the band you wish to scan.

(3) Press a microphone DOWN/UP button, or the DOWN or UP button above the main tuning knob, and hold it for ½-second until scanning starts.

The scanner will start checking all memories in the band. If you want to scan only FM memories, press the FM CH button. If you want to scan all bands, press the BAND key once briefly (you can press it again briefly to change scanning to only the band currently being scanned).

If you want to exclude a memory from scanning, recall the memory (normally, not while scanning), and press the MR key while the memory data is displayed. You will see a small arrowhead appear under the "CH" to the right of the memory number, indicating this memory will be ignored when scanning.

If you've just read through the last few paragraphs without actually trying these features, you may want to go though them again now while performing the keypresses: these functions can be very useful, but are unique in scanning systems, and so may be hard to remember without some practice.

### 4.10.2 Programmable Band Limits: the PMS System

The PMS (Programmable Memory Scan) feature allows you to set your own subband limits for tuning and scanning, on each band. These limits are stored in special PMS memories (two per band), and may be recalled at any time.

To store your subband limits:

(1) Press the VFO key to make sure you are operating on a vfo.

(2) Press the VFO A switch (to the left of the tuning knob), and tune this vfo to the desired lower subband edge.

(3) Press the VFO B switch (next to the A switch), and tune this vfo to the desired upper subband edge.

(4) Press F+PMS. This stores the frequencies from the two vfos into the two PMS memories for that band. Operation remains on the vfo.

To activate the PMS feature after storing your subband limits, just press the PMS key. "PMS" is displayed to the right of the frequency.

You can now select any mode and tune within your selected subband using the main tuning knob, DOWN/UP keys or microphone buttons. You can also use the FM CH or SSB CH switches and the CHANNEL knob for channelized tuning as you would on a vfo. The MHz/CH keys have a special function: the lefthand (DOWN) key jumps to the low edge of your subband, and the righthand (UP) key jumps to the high edge of your subband.

You can also scan your PMS subband, using the same method as for scanning a vfo (see the first paragraphs of §4.10).

To escape PMS operation, press either the VFO or MR key, or one of the CALL keys.

## 4.11 Repeater (semi-duplex) Operation

The FT-736R provides three methods to work split (receive on one frequency and transmit on another), to meet different operating needs. On the 144 MHz band, the ARS feature automatically enables repeater splits when operating in standard

FM repeater subbands. For other splits and on other bands, the +RPT and -RPT functions of the MODE switches can be used to manually select split operation. In cases where an odd split is only needed once, and where it would not be convenient to reprogram the offset, the RB-TA or RA-TB VFO selectors can be used to receive on one vfo and transmit on the other. Each method is described next.

**4.11.1** ARS (Automatic Repeater Split)

The FT-736R microprocessor is preprogrammed with standard 144 MHz repeater subbands common in many countries. Transceiver versions B1, C1 and H1 have-600 kHz shift from 145.6 to 145.8 MHz, while versions A, B2, C2 and H2 have -600 kHz shift from 145.1 to 145.5, 146.6 to 147.0 and 147.6 to 148 MHz; and +600 kHz split from 146.0 to 146.4 and 147.0 to 147.4 MHz. All other subranges are simplex (see chart below).

When you tune the receiver to any of these repeater subbands in the FM mode, with the FM CH switch depressed, transmission will automatically be offset higher (+) or lower (-) than the receive frequency. Although the subband limits are not reprogrammable, you can reprogram the split offset to any other frequency (besides the 600 kHz standard). The procedure is described in §4.11.3. Also, you can reverse transmit and receive frequencies with the REV key (upper right corner of the keypad). "REV" is displayed above the 10's of MHz digit. Press the REV key again to return to the original split.

**4.11.2** Manual ±RPT Splits

For other bands, and for 2m band splits not conforming to the ARS settings, you can program and select any valid repeater split using the shifted functions of the LSB[+RPT] and CW-N[-RPT] MODE keys. When shipped from the factory, the splits selected by these keys are the standard splits (for each band) for your version, as shown in the Model Chart on page 4.

To activate repeater split by this method, just press F+LSB[+RPT] (to shift the transmit frequency up), or F+CW-N[-RPT] (to shift down). A small '+' or '-' will appear in reverse characters above the leftmost frequency digit on the display, and when you transmit, the displayed frequency will shift up or down by the preprogrammed split. You can use the REV key to reverse transmit and receive frequencies in the same way as described in the previous section.

**Note:** if you see "Error" displayed when you try to transmit, or if you hear two beeps when you press the REV key, the split is set so that the transmitting frequency is out of band. Check the offset as described in §4.11.3, and reprogram it (or retune your receive frequency) as necessary.

To deactivate the split and return to simplex operation, press F+FM-N[SIMP].

AUTOMATIC REPEATER SPLIT SUBBANDS

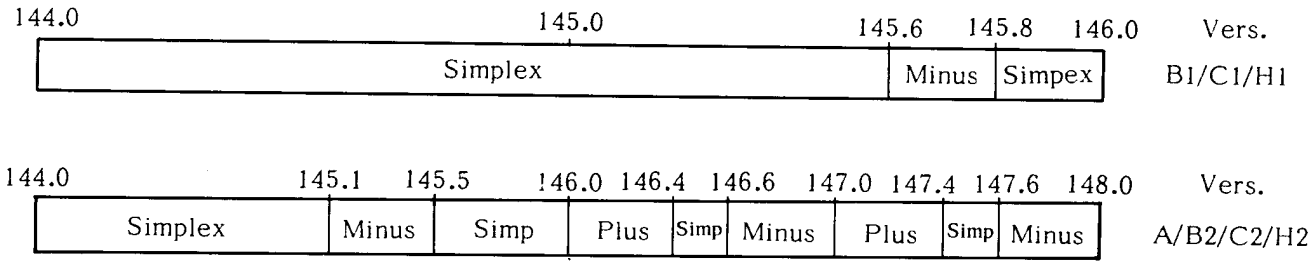

### 4.11.3 Reprogramming Split Offset

To display the offset (the amount of frequency shift), press F+BAND[OFFSET] (lower right corner). The display will now show the currently programmed offset for the operating band, with the leftmost digit blinking. If you want, you can change the offset by keying in new digits on the keypad, and pressing ENT[D]. Otherwise, press only ENT[D] or the RESET button to the right of the display to return the display to the operating frequency.

Note that whenever you store a memory, the current offset for that band is stored in that memory too; whether or not split operation is activated at that time. If you later change the offset, the split stored in the memory will not be changed: you will need to restore the memory from the vfo with the new offset if you want it changed. However, when operating on a memory, you can activate and change its offset temporarily. Remember that each band has its own independent offset.

### 4.11.4 Split Vfos

To use one vfo for transmitting and the other for receiving, press the VFO A or B switch to select the transmit vfo first, and tune it to the desired frequency. Then press the other switch and tune to the receiving frequency. Finally press either RB-TA (receive on B and transmit on A), or RA-TB (receive on A and transmit on B). Make sure that the ±RPT function is off (no '-' or '+' displayed) when you set the transmitting vfo, or else you will end up offsetting your transmit frequency from that displayed when you tune the vfo.

You can store these frequencies in memory when either the RB-TA or RA-TB switch is pressed. When such a memory is recalled, both '-' and '+' are displayed together above the frequency. If you attempt to transfer that memory back to the vfos later, you will need to remember to have the same switch pressed again.

To reverse the transmit and receive frequencies when operating split on both vfos, use the RB-TA and RA-TB switches: the REV key cannot be used.

Crossband full duplex operation is described in §4.17.

## 4.12 Priority Channel Monitoring

The PRIority feature allows you to monitor a memory while operating on a vfo. While receiving on the vfo, the receiver checks the priority channel (memory) for activity every few seconds. When a signal appears on the priority channel, the decimal points on the display will blink while the receiver pauses. If the PAUSE switch is ON, the pause will last about five seconds. If the PAUSE switch is OFF, the pause will last until the priority memory is again clear.

To activate priority monitoring;

(1) Press MR and turn the CHANNEL knob to select the memory to be monitored (you will have to store it first, if not already in memory).

(2) Press the PRI key. The display will shift to the vfo frequency, but the memory number will be displayed at the right with 'PRI' displayed above it.

You can now tune and operate on the vfo on any band or mode, as usual. While receiving, the display jumps to the priority memory every few seconds to check for activity. If you key the transmitter while the priority frequency is displayed, priority monitoring will be cancelled and you will be left operating on the memory (press the VFO key if you need to go back to the vfo to finish a QSO).

Priority monitoring can be cancelled manually at any time by switching vfos or by pressing the VFO, MR, or CALL keys.

### 4.13 Tone Squelch Operation

When the optional FTS-8 Tone Squelch Unit is installed the FT-736R can be used for silent monitoring of busy channels in the FM mode, and for accessing repeaters requiring subaudible CTCSS tones.

Different tone frequencies and encode/-decode status can be set each vfo, and may be stored in memories. Available tone frequencies are listed in the CTCSS Table on page 45.

To set the CTCSS tone frequency;

(1) Press the T SET key. The current tone frequency (in Hz) is now displayed.

(2) Turn the CHANNEL knob or press the MHz/CH keys to select the desired tone frequency.

(3) Press T SET again to set the displayed tone and return the display to the operating frequency.

After setting the tone frequency, you can activate either encode-only (if it is only necessary to transmit a tone, and you want to still receive all signals), or encode and decode (tone squelch), which keeps your squelch closed to all signals except those transmitting a matching tone.

For encode-only, press F+USB[ENC]. "ENC" will appear at the right side of the display. When you transmit (FM mode only), the subaudible tone that you selected will be transmitted along with your voice. Reception is not affected.

To activate tone squelch (encode and decode), press F+FM[T SQL]. Both "ENC" and "DEC" will appear at the right side of the display. Now, in addition to the tone being transmitted, the receiver will remain silent until a signal is received with a subaudible tone matching the frequency you selected above. Other signals not having the correct tone will cause the BUSY indicator to glow, but will not open the squelch.

To turn off encode and decode functions, press F+CW[T OFF].

### 4.14 Tips for SSB (LSB/USB) Operation

Although all of the controls and features available for SSB operation have already been described, obtaining optimum SSB performance requires skillful manipulation of these features by the operator, requiring mainly experience and experimentation. The tips in this section are provided to guide your experimentation, and (hopefully) help shorten learning time.

#### 4.14.1 Weak Signal SSB Reception

Weak SSB signals, by definition, are very close to the background noise level, suggesting that you will want to take all steps possible to decrease background noise while enhancing the desired signal(s), by taking every advantage of the differences between the two. In such cases squelch cannot be used, since the SSB squelch circuitry cannot distinguish between noise and signals.

The fast AGC setting can help you hear signals 'around' noise that cannot be blanked with the noise blanker, by causing receiver gain to recover quickly after a pulse. However, fast AGC also makes listening a bit of a strain, so try medium or slow AGC once you have a station tuned in.

Once the AGC is set up, you will want to take steps to tailor receiver sensitivity (signal-to-noise ratio). The objective here is to obtain a background noise level that is only a slight hiss (or nothing at all!), without loosing any wanted signals. On bands below 430 MHz, if background noise is strong enough to cause the S-meter to deflect, turn the RF control counter-clockwise. Your receiver is now set for maximum useful sensitivity on that band (the settings are different at different times, on different bands, and with different antennas and station locations).

On the other hand, if the background noise causes no S-meter deflection, you may need more receiver gain such as can be provided by a masthead preamp. If you have installed a preamp for the operating band (and set the jumpers as described in §3.6), you can activate it by the front panel PREAMP switch (upper left).

Note: Remember - there is no advantage to setting receiver gain higher than what is necessary to receive signals above the background noise. More amplification makes the S-meter read higher on signals and noise, but this usually causes the receiver to be more susceptible to distortion from strong signals, decreasing overall reception quality. For best reception quality, use the minimum sensitivity necessary to receive the desired signal.

**4.14.2** Strong Signal SSB Reception

For strong signal reception follow the same steps as above. Set the AGC to slow, and turn the RF gain back as much as possible so that you can still hear the signal clearly. When the receiver is set properly, signal-to-noise quality should be almost as good as FM.

**4.14.3** Suppressing QRM

If you hear unwanted stations on nearby frequencies, first make sure you have your station tuned in precisely (press CLAR if you retune during a QSO), and then press D LOCK to lock the tuning knob. Now try rotating the SHIFT control slightly. Notice that the pitch of the signals will shift, and you may be able to reduce the interference. The TONE control can be helpful in correcting for the altered audio pitch caused by SHIFT adjustment.

If the SHIFT adjustment does not help the interference might not be due to nearby signals, but to intermodulation from strong signals on far frequencies. If the station you are listening to is strong enough, make sure your preamp (if installed) is switched off, and reduce the RF gain as much as possible.

Before you switch D LOCK off and retune, make certain to re-center the SHIFT.

For heterodyne interference such as from unmodulated FM carriers, the NOTCH filter can be helpful. Press D LOCK to disable the tuning knob, and press the NOTCH switch and adjust the NOTCH control gradually for a dip in the interference (shown on the S-meter).

Remember to turn the NOTCH off before switching D LOCK off and retuning.

**4.14.4** Miscellanea

Use care when tuning in an SSB signal, and then press D LOCK so you can make fine adjustments to the IF passband and audio without having them suddenly upset by an accidental bump of the tuning knob. Use the memories for net or schedule frequencies. The CLARifier allows you to fine tune a memory without having to recall it to a vfo.

### 4.15 Tips for CW Operation

All of the tips for SSB operation apply equally to CW reception, with a few important additions. For automatic transmit/receive switching, VOX must be switched on.

When tuning around the bands, wider IF selectivity (CW mode, instead of CW-N) allows you to hear more signals at one time, often making tuning easier. However, when you find a station you wish to listen to (or call) switch to CW-N to cut out nearby signals and decrease noise (if you have the optional narrow CW filter installed). To avoid loosing the desired signal tune so that the pitch of his signal is about 600 Hz (the center of the passband).

AGC selection is a bit more critical when receiving CW, and depends on band crowding and code speed: select the setting that provides the smoothest sounding code.

Handling interference on CW is similar to SSB: both SHIFT and NOTCH are even more effective - the NOTCH filter can be used to suppress CW signals on nearby frequencies.

If using the internal electronic keyer, adjust the KEYER speed control while squeezing the keyer paddles (generating—·—·—·). Make sure the DRIVE control is fully counterclockwise when you do this.

### 4.16 Tips for FM Communications

FM operation with the FT-736R uses either ±2.5 (FM-N mode) or ±5 kHz (FM mode) deviation. The ±5 kHz FM mode is most common. However, the ±2.5 kHz FM-N mode uses a narrower receiver IF filter, and thus may prove useful in very crowded bands, where adjacent channel interference makes the standard FM bandwidth less practical. Bear in mind that for proper performance both stations in a QSO should use the same deviation/bandwidth.

By convention, each band has certain standard channel steps, which are programmed in each version of the FT-736R for the area in which the transceiver is to be used. The preprogrammed standard steps are indicated in the Model Chart on page 4, and can be reset as described in §4.8.

As mentioned before, you will generally want to use the squelch during FM operation: set the SQL control so that the noise is just silenced on a clear channel.

If you want to fine tune the receiver using the CLARifier (§4.7.2) in between channel steps, set the METER selector to the DISC/ALC position. This causes the meter to indicate discriminator center tuning during reception: when a signal is tuned in correctly (or when no signal is present at all), the meter deflects to the center of its range. If the meter deflects to either side of center, a signal is being received off-center. You can always turn the DISC switch off to check signal strength after a signal is 'centered'.

Basic repeater operation is described pretty thoroughly in §4.11. If you need a Burst tone to access a repeater, you can press the T CALL button to transmit the burst tone for as long as you hold the button. However, if all repeaters in your area require a Burst tone and you do a lot of repeater operation, set the BURST button on. This automatically prefixes each transmission with a ½-second burst tone.

While holding the PTT switch down, you can use the upper ten (light gray) keys on the keypad to generate DTMF tones for autopatching.

See §4.13 for tone squelch operation.

## 4.17 Satellite (Full Duplex) Operation

The FT-736R provides two special purpose full duplex vfos for crossband operation, as required for amateur satellite communications. These vfos are denoted 'A' and 'B', but are different from the A and B vfos described elsewhere in this manual. Similarly, ten full duplex memories (numbered 0 - 9) are provided in addition to the 100 already described. Each full duplex vfo and memory can store a complete pair of satellite down- and uplink frequencies and modes, so you can store up to twelve full duplex mode/frequency pairs in the FT-736R.

Briefly, setting up satellite operation requires tuning the receive frequency and mode of one of these special vfos for the downlink, and the transmit frequency and mode of the same vfo for the uplink.

Please review the description of the SAT selector on page 12 before proceeding.

To operate through a satellite;

(1) Set the SAT selector (rotary switch below the left end of the display) to the RX (receive) position. "SAT" is displayed, along with "VFO-A" or "VFO-B" according to which VFO switch is depressed. The frequency on the display is the receiving frequency of the corresponding full duplex vfo.

(2) Set the transceiver to the band, mode and approximate downlink frequency of the satellite you wish to use (you may need to refer to a recent ham magazine for current satellite frequencies and schedules).

NOTE: If you cannot select the desired band for a full duplex vfo by pressing the BAND key, it is because the other half of this vfo is already set to that band (the microprocessor disallows full duplex receive and transmit frequencies on the same band). Just press the REV key at the upper right corner of the keypad; this exchanges the receive and transmit frequencies, and gives you access to the desired band.

(3) Move the SAT selector to the TX (transmit) position, and tune to the band, mode and uplink frequency that correspond with the downlink frequency set in the receive vfo (this relationship is determined by the satellite design: for example, on OSCAR 10, if you tune to receive in the LSB mode on 145.9 MHz, you will need to transmit in the USB mode on approximately 435.1 MHz to hear your own signal. The frequency is approximate (±several kHz) because it is subject to Doppler shift due to motion of the satellite.

(4) Set the METER selector (left of the meter) to the 'S' position so you can monitor your received signal strength on the downlink.

You now have the transceiver set up for satellite operation. However, you will need to precisely locate your downlink signal coming from the satellite.

(5) Set the SAT selector back to RX to display your receiving frequency, and close the PTT switch (or close your key to send a string of dots) to transmit. Tune back and forth a few kHz to center the receiver on your signal, then release the PTT switch or key.

(6) Move the SAT selector to the REV position to link receive and transmit frequency tuning.

Now, when you tune the displayed receiving frequency, the transmitting frequency will tune precisely the same amount in the

opposite direction. This allows you to tune around the satellite subband easily, requiring only small correction of your receiving frequency (step 5) from time to time to compensate for change in Doppler shift.

To check your transmit power and ALC settings while working through the satellite, use the METER selector's SAT PO and ALC positions (counterclockwise from center).

Remember there is another full duplex vfo. Once you have one set up, you can keep it that way and press the VFO B or A switch (whichever is not depressed) to select the other. This second full duplex vfo can be set up for another satellite or mode, in the same way as the first.

Also, you can store and recall full duplex pairs in the ten special-purpose memories. These function the same as the regular memories, described in §4.9, but the memory numbers are displayed as only one digit, instead of two (as are the general-purpose memories). Of course, the SAT selector must be in one of the ON positions to access the full duplex memories.

One more feature of the SAT mode: when you are not working through a satellite, but still need full duplex operation, set the SAT selector to the NOR position. Now the receive and transmit frequencies will track together in the same direction when you tune either.

To quit full duplex operation, return the SAT selector to the OFF position.

## 4.18 Packet Operation

### 4.18.1 Bell 202 (F2) Packet

The FT-736R offers special features to optimize packet radio operation on VHF or UHF when using the FM mode of emission. For proper connection, you should determine the AFSK signal levels provided by your tnc (terminal node controller) for transmission, as well as the signal levels required by the tnc for reception.

The DATA IN/OUT jack allows direct connection of a tnc to the FM modulator and demodulator in the transceiver, bypassing pre- and de-emphasis circuits and other audio stages which can distort digital signals. This minimizes the number of components that could degrade the AFSK signal between the tnc's modem and the transceiver's modulator and demodulator.

However, many tnc designers have succumbed to the suboptimal characteristics of common FM voice transceivers by adding more audio pre- and de-emphasis stages of their own, to counter those in voice-only transceivers. The FT-736R gives you the choice: you may either connect your tnc to the MIC jack and EXT SPKR jack as you would to any other transceiver (and loose any advantage of bypassing the extra stages), or modify your tnc by connecting directly between its modem and the DATA IN/OUT jack of the FT-736R.

Balanced AFSK tone output for transmission from the tnc (that is, without any added de-emphasis), should be connected

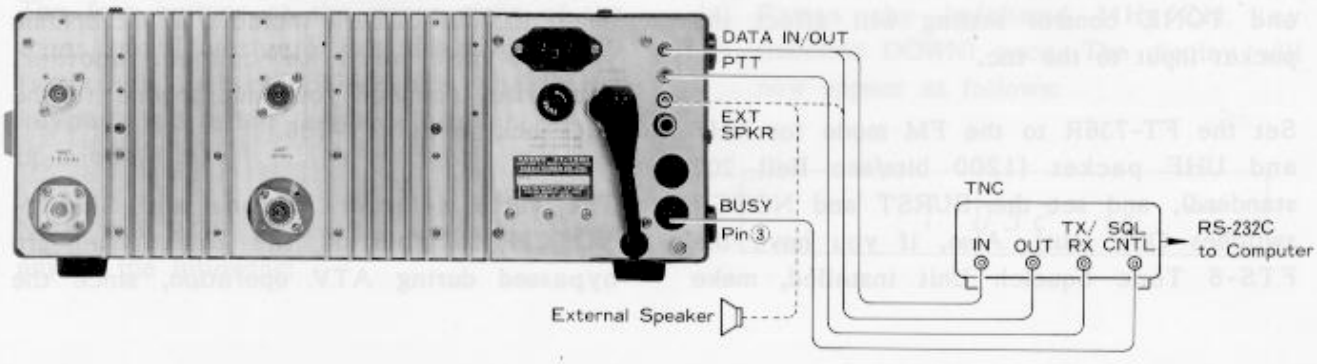

to the outer contact of the DATA IN/OUT jack: impedance should be 600 ohms, which corresponds with most tncs. Output signal level from the tnc should be adjusted to about 30mVrms, or so that the BUSY indicator on the front of the FT-736R lights dimly when transmitting.

If your tnc has de-emphasis applied to the AFSK output, the levels of the two tones will be different, and must be re-balanced by pre-emphasis in the FT-736R. In this case connect the AFSK signal from the tnc for transmission to the microphone jack (also 600-ohm impedance), and adjust the MIC gain control so that the BUSY indicator glows dimly when transmitting.

For receiving, there are also two available output points for AFSK, again depending on whether your tnc pre-emphasizes receiver audio. If the tnc can accept balanced tone levels, connect the center tip of the DATA IN/OUT jack to the receiving input on the tnc: output level is 200mV at 10 kilohms, so make sure your tnc can handle this level (or add a 10k resistor to ground and another in series to set the level).

If your tnc requires unbalanced tones (and includes its own pre-emphasis, such as many TAPR TNC-2 clones), use the high level signal at the EXT SP or PHONES jack.

Note, however, that using the EXT SP or PHONES jack has two serious disadvantages: (1) plugging into these jacks disables the loudspeaker, making it impossible to monitor the receiver (this is not recommended); and (2), the AF gain and TONE control setting will affect the packet input to the tnc.

Set the FT-736R to the FM mode for VHF and UHF packet (1200 bits/sec Bell 202 standard), and set the BURST and NOTCH switches OFF (out). Also, if you have the FTS-8 Tone Squelch Unit installed, make sure that tone squelch is off. Receiver tuning is as described for FM (§4.16). Press the FM CH switch for channelized tuning with the CHANNEL knob. You can also use the CAT System to select the operating channel automatically via software. Use the memories to store the common packet channels in your area, for easy recall.

### 4.18.2 QPSK Packet Operation

This mode is used for narrowband 1200 bits/sec operation, such as on the downlink of the Fuji (FO-12) satellite. You need a QPSK modem in your tnc, but connections are otherwise the same as for Bell 202 packet. Use either SSB mode for receiving, but make sure that the SSB CH switch is OFF, and that 10 Hz tuning steps are selected (by the STEP key). You can use the CAT System or the scanning lines of the MIC jack for automatic tuning if your QPSK modem includes this function. For transmitting to the FO-12 satellite, use standard Bell 202 in the FM mode, as described above.

## 4.19 Fast Scan Television (ATV)

The optional TV-736 ATV Unit allows fast scan NTSC-standard television operation on the 1.2 GHz band (when the optional 1.2 GHz Band Module is installed).

Connect the TV-736 through the holes in the right side of the transceiver to the 1.2 GHz Band Module. Connect your peripherals to the TV-736 as shown on the next page. If your camera includes a microphone you do not need to connect another. Otherwise, connect your microphone to the MIC jack on the TV-736.

The mode selector buttons and SHIFT/-NOTCH controls on the front panel are bypassed during ATV operation, since the

required signal bandwidth is 8 to 10 MHz, so you do not need to worry about setting them. Use the RF control on the TV-736 to adjust your power output.

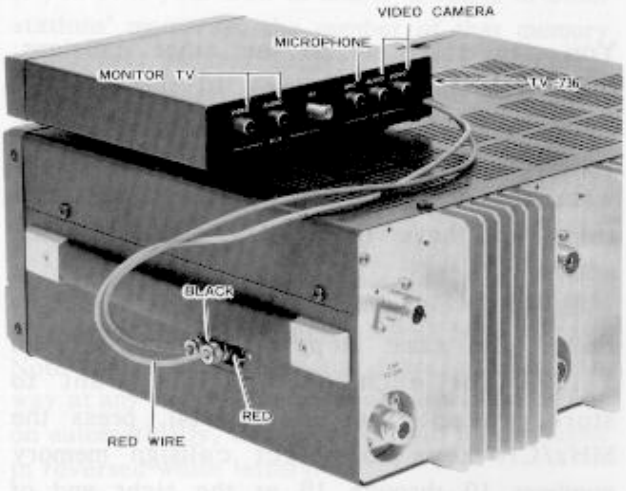


## 4.20 AQS Operation

The AQS feature built into the FT-736R is a digital MSK (minimum-shift keying) packet system which provides automatic callsign identification, digital squelch, group calling and automatic clear channel access when used with other AQS-equipped stations in the FM mode. These functions are accomplished by 0.2-second packet bursts each time the PTT switch is pressed. A rudimentary logging and messaging system can be added with the optional FMP-1 Message Processor.

Twenty-one digital code memories are provided: ten for callsigns up to eight characters long, ten for group squelch codes up to five digits long, and one for calling CQ. An additional memory is provided for your own callsign.

The four buttons at the upper right of the front panel activate and deactivate AQS functions, which otherwise share the keypad and other controls with non-AQS operation.

Note that AQS cannot be activated during any of the following:

a. While scanning
b. During priority monitoring
c. During memory checking (MCK)
d. While the SAT functions are active ("SAT" displayed)
e. While CTCSS tone squelch is active
f. During transmission

Also note that priority monitoring and reverse (split) functions are disabled while AQS is on.

### 4.20.1 Callsign (ID) Setting

Each station is identified digitally by the callsign programmed into the transceiver by the operator. The callsign may consist of up to eight ASCII characters (capital and small letters, plus punctuation marks).

To store a callsign (K7JA/1, for example):

(1) Use the ASCII chart on page 45 to look up the ASCII code equivalent for each letter of the callsign (substitute the following with your own).

| | | | | | | |
|---|---|---|---|---|---|---|
| Call: | K | 7 | J | A | / | 1 |
| ASCII: | 75 | 55 | 74 | 65 | 47 | 49 |

(2) Press the AQS button. "AQS" will appear in reverse orange letters at the left side of the display.

(3) Press the CLAR[CODE] key at the lower left corner of the keypad to allow entry of a digital code. The display will now show all zeros (unless a code has been previously stored).

(4) Press the lefthand MHz/CH key (labelled DOWN) once. The display will now appear as follows:

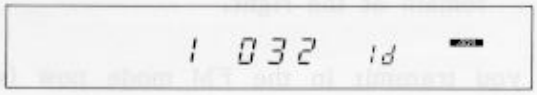

The "1" at the left tells you that this is the first character of the callsign. "032" is the ASCII code for a space character (indicating that a space, the default value, is currently programmed in this callsign memory). "Id" at the right indicates this is your own station identification memory.

(5) Press the ENT button below the keypad. The zero on the display will begin to blink, indicating that you may now key in new data.

(6) For this example (if K7JA/1 is your callsign), hit "0", "7" and "5" on the keypad. This is the ASCII code for the letter "K", the first letter of the callsign (again, you must substitute the ASCII code for the first letter of your own callsign). Note that a leading zero is required for ASCII codes below 100.

(7) Press the righthand MHz/CH key, labelled "UP". The ASCII code for the second letter of the callsign memory (which is ASCII 032 by default) is now displayed.

(8) Repeat steps (6) and (7), keying in 055, 074, 065 (for the "7JA" part of the callsign), and then 047 and 049 for the "/1" part of the callsign. You can enter up to eight callsign letters. If your callsign is shorter, make sure all trailing characters are filled with ASCII 032 (the space character).

(9) Press ENT to memorize the callsign data. A small arrowhead will appear on the display just to the right of "Id", indicating that the identification callsign has been stored, and is activated.

(10) Press the CLAR[CODE] key to return to the frequency display. "Id" will remain at the right.

If you transmit in the FM mode now (with AQS active), your callsign will be sent digitally whenever the PTT switch is pressed.

### 4.20.2 Storing Other Callsigns

You can store up to ten other callsigns, (digital memory numbers 10 through 19), for making individual digital squelch calls. This feature is useful if you sometimes want to call individual AQS-equipped stations who have their AQS digital squelch active.

Follow the same steps (1) through (10) in §4.20.1 for each callsign you want to store, except that in step (4), press the MHz/CH keys to select callsign memory numbers 10 through 19 at the right end of the display (instead of "Id").

Memory 20 is programmed with "CQ CQ CQ".

### 4.20.3 Digital Squelch Operation

Once you have stored callsigns of other AQS-equipped stations you can call them with digital tone squelch.

1) With your AQS system on, press the CLAR-[CODE] key and use the MHz/CH buttons to select either the tone memory number in which you stored the callsign of the station you want to call (between 10 and 19), or your own Id (if you want their display to show who called).

2) Press CLAR[CODE] again to return to the frequency display. The selected tone memory number (or "Id") will appear at the right of the frequency.

3) Press your PTT switch for a second. A packet will be transmitted containing the callsign indicated by the memory number (or "Id") displayed to the right of the frequency.

All AQS receivers in range on this frequency will receive this data, and their microprocessors will check the transmitted callsign against their own Id

callsign (and other stored callsigns). The squelch of stations that find a match in their Id or memories will then open, and "READY" will appear blinking on their display.

If you sent your own Id and it is found in other stations' memories, the number of that memory will appear on their displays (so they can determine who called without having to hear your voice). If you sent another station's Id, his display will show "Id", and other's with his callsign in memory will see that memory number displayed.

Of course, to receive a digital squelch call you must have D SQL on (press the D SQL button). Note that you can activate digital squelch this way at any time: if AQS was off, it will be turned on automatically, and "D SQL" will be displayed in reversed white letters.

Your receiver now remains silent until someone sends one of the callsigns you have stored in the digital code memories (including your Id). At that time, your receiver comes to life, displays the memory number of the received callsign (or "Id", if it is yours) and "READY" appears blinking on your display. Furthermore, if they called with a Channel Access Call (CAC, described below), your operating frequency will be changed.

When you press your PTT switch to respond to the call, digital squelch will automatically turn off, as "READY" stops blinking. When you finish the QSO (or if you get no response from them), press RESET once to re-enable the AQS system for future calls. Also, if your frequency has been changed (by the CAC function), press RESET once more to return to your original (AQS calling) frequency.

Note that Digital Squelch turns off when you press the PTT button, or the RESET, AQS or D SQL buttons. The RESET and D SQL buttons leave AQS active, while the AQS button also disables AQS.

### 4.20.4 Storing Group Codes

Up to ten 5-digit numerical group codes may be stored in tone code memories 00 through 09. These are used for channel access calling (CAC) and digital squelch monitoring of calls within a group of stations (such as a club). When a signal containing an AQS group code is received, all of those stored in your memories are checked for a match. If found, your squelch opens and you can monitor (and respond to) the call.

Storing group codes is similar to storing callsigns (but simpler);

(1) Press AQS so that the orange AQS indicator is displayed, and then press CLAR[CODE].

(2) Press the MHz/CH UP and DOWN keys to select one of digital tone memories 00 through 09 (at the right side of the display). Notice that these memories display five numeric digits (default zeros), instead of only four.

(3) Press the ENT button. The leftmost digit will start blinking, indicating that you can now enter a code.

(4) Use the numeric keypad keys to enter the 5-digit code used by a group of which you are a member. This can be anything from 00001 through 99999, but must be the same code as entered by the others in the group (the memory number does not have to be the same - only the 5-digit code).

(5) Press ENT to store the code. If you want to enter more codes (for other groups), press the MHz/CH UP and DOWN keys to select another tone memory between 00 and 09, and repeat steps (3) and (4).

(6) Press the CLAR[CODE] key to return to the frequency display. The tone memory number of the last code you selected will be displayed at the right, with a small arrowhead indicating that this is a stored tone memory.

**4.20.5** Channel Access Calling (CAC)

Channel Access Calling is an automatic-QSY system: one transceiver scans a subband for a clear channel and when found, allows the operator to transmit the new frequency data digitally to another AQS transceiver (on an initial calling frequency), causing both to automatically QSY to the clear channel. A "clear channel", for this purpose, is one at which there is no signal with more than 10dB S/N (weaker signals, however, are not detected, despite the setting of the noise squelch).

There are three prerequisites for CAC operation:

a. CAC can only be used in FM mode.

b. The subband used for CAC is the PMS subband, which should be stored before using the CAC feature (see §4.10.2).

c. Both stations must have stored either the same 5-digit group code, as described in §4.20.3 for the FT-736R, or the calling station must have previously stored the other station's callsign Id in one of his callsign memories.

To make a Channel Access Call, first select the memory of the group code or callsign to be used;

(1) Press AQS, if necessary, to turn on the AQS system.

(2) Press the CLAR[CODE] key to display tone codes, and use the MHz/CH UP and DOWN keys to select the group code of the group (memories 00 - 09) or the callsign Id of the individual (memories 10 through 19) you want to call. These must have been prestored in both transceivers.

(3) Press CLAR[CODE] again to return to the frequency display.

Note that if you have just used the group code or callsign in a QSO, you have already done the above, and the correct memory number is displayed. In this case you may want to warn the other station to standby while you activate CAC (he must also activate his AQS, if it is not already on). Also, if he has AQS activated and his READY indicator is on, he must press the RESET button to turn "READY" off.

(4) Instruct your transceiver to find a clear channel, by pressing the CAC button. The display will show the PMS subband channels being checked, beginning with the first one above the bottom of the (PMS) subband.

(5) When a clear channel is found, scanning will stop and the orange AQS indicator will blink, while your display returns to your original frequency. Now you can press the PTT switch to transmit the digital frequency data to the other station (or else press the RESET button if you decide not to QSY).

(6) After sending the data, the AQS indicator stops blinking, and "READY"

appears beneath it. Also your operating frequency (AND that of the other station, if he received you) changes to the clear channel.

"READY" also appears blinking on his display when he receives your CAC data. He can now press his PTT switch to send the acknowledgement. His READY indicator then stops blinking, but remains on.

If the other station does not receive your CAC his transceiver will naturally not QSY, although yours does. You can simply give him another call (on the old frequency) by pressing the CAC button again. Your display will revert to the original frequency to call him. If he does not respond, press RESET twice to return to your original frequency.

At the receiving end (if you receive a CAC from another station), you will hear two sets of three beeps and see your frequency change, after which READY will appear blinking. It stops blinking when you press your PTT switch.

When your QSO is finished, press the RESET button: once to clear the READY indicator so you can receive other calls, and once more if you want to return to the original frequency (automatically).

### 4.20.6 Digital Memory Lockout

You may have noticed that when you have many callsigns and group codes stored in memory, your transceiver responds to any calls using any of those callsigns or codes. When the frequency is busy, this may not be desirable. AQS therefore provides a lockout feature that allows you to disable code and callsign memories individually.

To disable a digital memory, activate AQS, press CLAR[CODE], and use the MHz/CH buttons to select the memory number to be disabled. Now press the F[C] key. The arrowhead that appeared when you first stored the memory will disappear, indicating that the memory is now locked out. You can even lock out your callsign Id, which will prevent your transceiver from responding to calls placed to you.

To re-enable a locked out memory, just repeat the same steps used to disable it.

### 4.20.7 FMP-1 Digital Message Processor

The FMP-1 is a message and callsign entry, storage and display system for the AQS feature which adds digital messaging and automatic logging to the AQS system in the FT-736R.

The heart of the FMP-1 is a custom-designed 8-bit CMOS microprocessor which links to the transceiver via the CAT System. A 16-digit fluorescent display shows callsigns of AQS signals received, and incoming messages up to 14 characters long. Up to ten callsigns, three incoming messages and three outgoing messages are automatically stored in battery-backed CMOS memory. The FMP-1 includes an output jack for connecting an external personal computer, if desired, to expand memory storage and display.

A mobile bracket and mounting hardware is supplied with the FMP-1.

## 4.21 CAT System Computer Control

The CAT (Computer-Aided Transceiver) System in the FT-736R allows control of standard and satellite vfo frequencies and modes, IF shift and AQS functions (including digital message passing) by the operator's external personal computer. CTCSS functions are also controllable when the optional FTS-8 Tone Squelch Unit is installed in the transceiver. Noise squelch status and S-meter data is provided digitally for interpretation by software in the external computer.

Serial data is passed via the CAT jack on the rear panel of the transceiver at 4800 bits/sec (CAT jack pinout is shown on page 13). Each data byte sent consists of one start bit, 8 data bits, two stop bits and no parity bit:

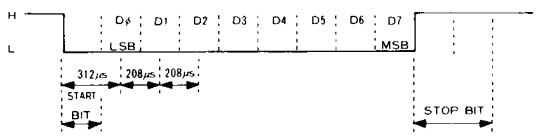


**Data Format for 1 Character**

All CAT System data transfers (with the exception of incoming messages, described later) consist of blocks of five bytes as just described, sent with 50 to 200ms between each byte. The last byte to be sent in each block is the instruction opcode, while the first four bytes of each block are arguments: either parameters for that instruction, or dummy values (required to pad the block out to five bytes when fewer are needed by the instruction):

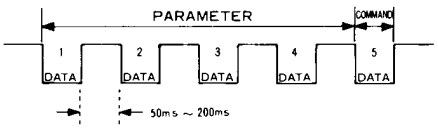


**Data Format for 1 Block (5 Characters)**

There are twenty-five types of instruction opcodes for the FT-736R, listed in the Instruction Code Chart on page 46. Notice that some instructions require no arguments. However, every Command Block sent to the 767 must always consist of five bytes. The unused parameter bytes will be ignored when such Instructions are executed, so their value is irrelevant (they need not be zeroed).

EXAMPLE: To set 145.00000 MHz as the current operating frequency;

(1) Build the four argument byte values from the desired parameter (frequency, in this case):

```
1 4 5.0 0 0 0 0
14   50   00   00   FREQ SET
                    Instruction
```

(2) Convert the decimal frequency argument values into packed BCD (Binary-Coded-Decimal, with two decimal digits encoded into each byte), and add the appropriate instruction byte on the end. The small "h"s below indicate hexadecimal (base 16) values, which in packed BCD use the same digits as their decimal equivalents.

```
14h 50h 00h 00h 01h
MSD                 LSD
Frequency Parms
```

(3) Send the five bytes to the transceiver, MSD first.

Notice that, for frequency parameters, the 10 Hz digit may also be programmed, although it does not appear on the display. Also note that the first hexadecimal half-byte (nybble) for frequencies in the 1200 MHz band is NOT converted into BCD, as there are not enough bits. Instead, the hexadecimal value "C" is used (which is equivalent to 12 decimal). So, for example,

if the above frequency had been 1295.00000 MHz, the Frequency parameters would be;

C9h 50h 00h 00h

The first 23 instructions in the Chart simply alter operating settings in the transceiver, without any data being returned to the computer from the transceiver (on the Serial Output line). However, the last two instructions in the Chart cause the FT-736R to return a Data Block to the computer: in both of these cases, the returned block will contain four copies of either the squelch status or S-meter value (in the first four bytes), followed by an echo of the instruction opcode (either 0E7h or 0F7h). This Data Block is returned within a hundred or so milliseconds after sending the Command Block, so any controlling software must be ready to read the Data Block very quickly after sending the Command Block.

The exception to the 5-byte Block rule is a special 15-byte Message Block sent from the FT-736R to the CAT line whenever an AQS digital message is received. An AQS digital message is a 14-character self-error-correcting (Hagelburger NRZ) encoded packet sent over the air at 1200 bits/sec MSK in the FM mode. Firmware in the main microprocessor of the FT-736R applies error-correction and decodes these characters and the message number (from 1 to 4), passed to the CAT system in the last byte, as follows:

**Message Numbers (Last byte of Messages)**

| Message No. | Sending | Receiving |
|---|---|---|
| 1 | 46h | 4Fh |
| 2 | 56h | 5Fh |
| 3 | 66h | 6Fh |
| 4 | 76h | 7Fh |

CTCSS TONE CODES

This data is significant only if the optional FTS-8 Tone Squelch Unit is installed. Note that CTCSS tones are only active in the FM mode; that the T ENC switch on the front panel must be pressed for the tone to be transmitted.

| Freq. (Hz) | Value (Hex) | Freq. (Hz) | Value (Hex) | Freq. (Hz) | Value (Hex) |
|---|---|---|---|---|---|
| | | 136.5 | 2Fh | 241.8 | 1Fh |
| 67.0 | 3Eh | 141.3 | 2Eh | 250.3 | 1Eh |
| 71.9 | 3Dh | 146.2 | 2Dh | C67.0* | 1Dh |
| 77.0 | 3Ch | 151.4 | 2Ch | C71.9 | 1Ch |
| 82.5 | 3Bh | 156.7 | 2Bh | C74.4 | 1Bh |
| 88.5 | 3Ah | 162.2 | 2Ah | C77.0 | 1Ah |
| 94.8 | 39h | 167.9 | 29h | C79.7 | 19h |
| 100.0 | 38h | 173.8 | 28h | C82.5 | 18h |
| 103.5 | 37h | 179.9 | 27h | C85.4 | 17h |
| 107.2 | 36h | 186.2 | 26h | C88.5 | 16h |
| 110.9 | 35h | 192.8 | 25h | C91.5 | 15h |
| 114.8 | 34h | 203.5 | 24h | | |
| 118.8 | 33h | 210.7 | 23h | * 'C' tones are | |
| 123.0 | 32h | 218.1 | 22h | High Q (80) | |
| 127.3 | 31h | 225.7 | 21h | | |
| 131.8 | 30h | 233.6 | 20h | | |

**Decimal ASCII Codes**

| Chr | ASC | Chr | ASC | Chr | ASC | Chr | ASC | Chr | ASC | Chr | ASC |
|---|---|---|---|---|---|---|---|---|---|---|---|
| [SPC] | 032 | 0 | 048 | @ | 064 | P | 080 | ` | 096 | p | 112 |
| ! | 033 | 1 | 049 | A | 065 | Q | 081 | a | 097 | q | 113 |
| " | 034 | 2 | 050 | B | 066 | R | 082 | b | 098 | r | 114 |
| # | 035 | 3 | 051 | C | 067 | S | 083 | c | 099 | s | 115 |
| $ | 036 | 4 | 052 | D | 068 | T | 084 | d | 100 | t | 116 |
| % | 037 | 5 | 053 | E | 069 | U | 085 | e | 101 | u | 117 |
| & | 038 | 6 | 054 | F | 070 | V | 086 | f | 102 | v | 118 |
| ' | 039 | 7 | 055 | G | 071 | W | 087 | g | 103 | w | 119 |
| ( | 040 | 8 | 056 | H | 072 | X | 088 | h | 104 | x | 120 |
| ) | 041 | 9 | 057 | I | 073 | Y | 089 | i | 105 | y | 121 |
| * | 042 | : | 058 | J | 074 | Z | 090 | j | 106 | z | 122 |
| + | 043 | ; | 059 | K | 075 | [ | 091 | k | 107 | { | 123 |
| , | 044 | < | 060 | L | 076 | \ | 092 | l | 108 | \| | 124 |
| — | 045 | = | 061 | M | 077 | ] | 093 | m | 109 | } | 125 |
| . | 046 | > | 062 | N | 078 | ^ | 094 | n | 110 | — | 126 |
| / | 047 | ? | 063 | O | 079 | _ | 095 | o | 111 | DL | 127 |

## INSTRUCTION CODE CHART

("xx" indicates padding: any value is acceptable)

| Instruction Name | Parameters (BCD) MSD | | | | Instr. Code | Remarks |
|---|---|---|---|---|---|---|
| CAT On/Off | xx | xx | xx | xx | yy | yy: 00h=ON, 80h=OFF. Must be ON before any other commands sent. Disables tuning, mode and shift controls. |
| These functions affect the vfo that is active when the CAT System is turned on: | | | | | | |
| Frequency Set | p1 | p2 | p3 | p4 | 01h | p1-p4: eight packed BCD digits* |
| Mode Set | p1 | xx | xx | xx | 07h | p1: 00h=LSB, 01h=USB, 02h=CW, 82h=CWN, 08h=FM, 88h=FMN |
| Tx/Rx | xx | xx | xx | xx | yy | yy: 08h=Transmit, 88h=Receive |
| Split Direction | xx | xx | xx | xx | yy | yy: 09h=minus, 49h=plus, 88=simp. |
| Split Offset | p1 | p2 | p3 | p4 | F9h | p1-p4: eight packed BCD digits** |
| CTCSS Status | xx | xx | xx | xx | yy | yy: 0Ah=Enc/Dec, 4Ah=Enc, 8Ah=Off |
| CTCSS Tone Code | p1 | xx | xx | xx | FAh | p1: see CTCSS Tone Chart, page 45 |
| Full Duplex On/Off | xx | xx | xx | xx | yy | yy: 0Eh=ON, 8Eh=OFF |
| Full Dup Rx Mode | p1 | xx | xx | xx | 17h | p1: (same as for "Mode Set") instruction |
| Full Dup Tx Mode | p1 | xx | xx | xx | 27h | p1: (same as for "Mode Set") instruction |
| Full Dup Rx Freq. | p1 | p2 | p3 | p4 | 1Eh | p1-p4: eight packed BCD digits* |
| Full Dup Tx Freq. | p1 | p2 | p3 | p4 | 2Eh | p1-p4: eight packed BCD digits* |
| These commands require that the AQS On command be sent first | | | | | | |
| AQS On/Off | xx | xx | xx | xx | yy | yy: 0Bh=ON, 8Bh=OFF |
| ID Callsign Set | p1 | p2 | p3 | p4 | 05h | p1-p4: first 4 ASCII characters |
| | p5 | p6 | p7 | p8 | F5h | p5-p8: second 4 characters |
| Group Code Set | p1 | p2 | p3 | xx | n4h | p1, p2 & high nybble of p3 hold 5-digit packed decimal code. n4h: Tone Mem (0-9) x 10h + 4 |
| Callsign Mem Set | p1 | p2 | p3 | p4 | 05h | p1-p4: first 4 ASCII characters |
| | p5 | p6 | p7 | p8 | n5h | p5-p8: second 4 characters n5h: Tone Mem (10-19) - 10h x 10h + 5. |
| CAC | xx | xx | xx | xx | 0Dh | Transmit Channel Access Call (CAC) |
| Control Freq Set | p1 | p2 | p3 | p4 | 02h | p1-p4: eight packed BCD digits* |
| Comm Freq Set | p1 | p2 | p3 | p4 | 03h | p1-p4: eight packed BCD digits* |
| AQS Reset Function | xx | xx | xx | xx | 8Dh | |
| Digital Squelch | xx | xx | xx | xx | yy | yy: 0Ch=ON, 8Ch=OFF |
| Send Dig. Message | p1 | p2 | p3 | xx | 16h | p1-p14: ASCII message (padded with spaces: 20h) |
| | p4 | p5 | p6 | xx | 26h | |
| | p7 | p8 | p9 | p10 | 36h | mm: (message no. + 3) x 10h + 6 |
| | p11 | p12 | p13 | p14 | mm | (see "Message Numbers: Sending" Table) |
| These commands cause the transceiver to return a Data Block | | | | | | |
| Test Squelch Stat. | xx | xx | xx | xx | E7h | returns 00 if closed, 80h if open |
| Test S-meter | xx | xx | xx | xx | F7h | returns level between 30h and ADh |

* see examples in the text

** your software must check to ensure parameters are within the current band

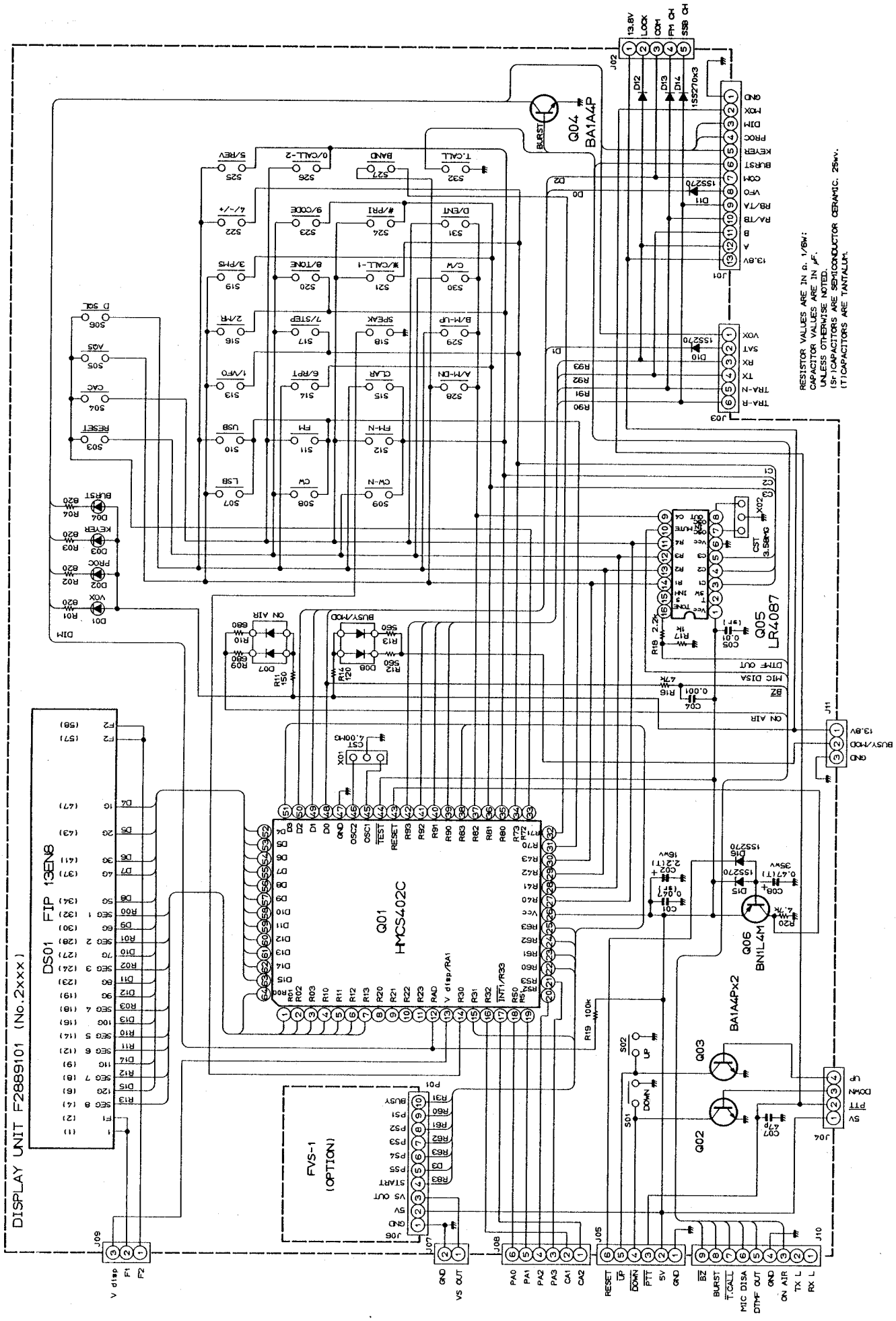
DISPLAY UNIT F2889101 (No.2xxx)
DS01 FIP 13EN8
Q01 HMCS402C
Q02 BA1A4P
Q03 BA1A4Px2
Q04 BA1A4P
Q05 LR4087
Q06 BN1L4M
FVS-1 (OPTION)
RESISTOR VALUES ARE IN Ω, 1/6W;
CAPACITOR VALUES ARE IN μF,
UNLESS OTHERWISE NOTED.
(S): CAPACITORS ARE SEMICONDUCTOR CERAMIC, 25WV.
(T): CAPACITORS ARE TANTALUM.

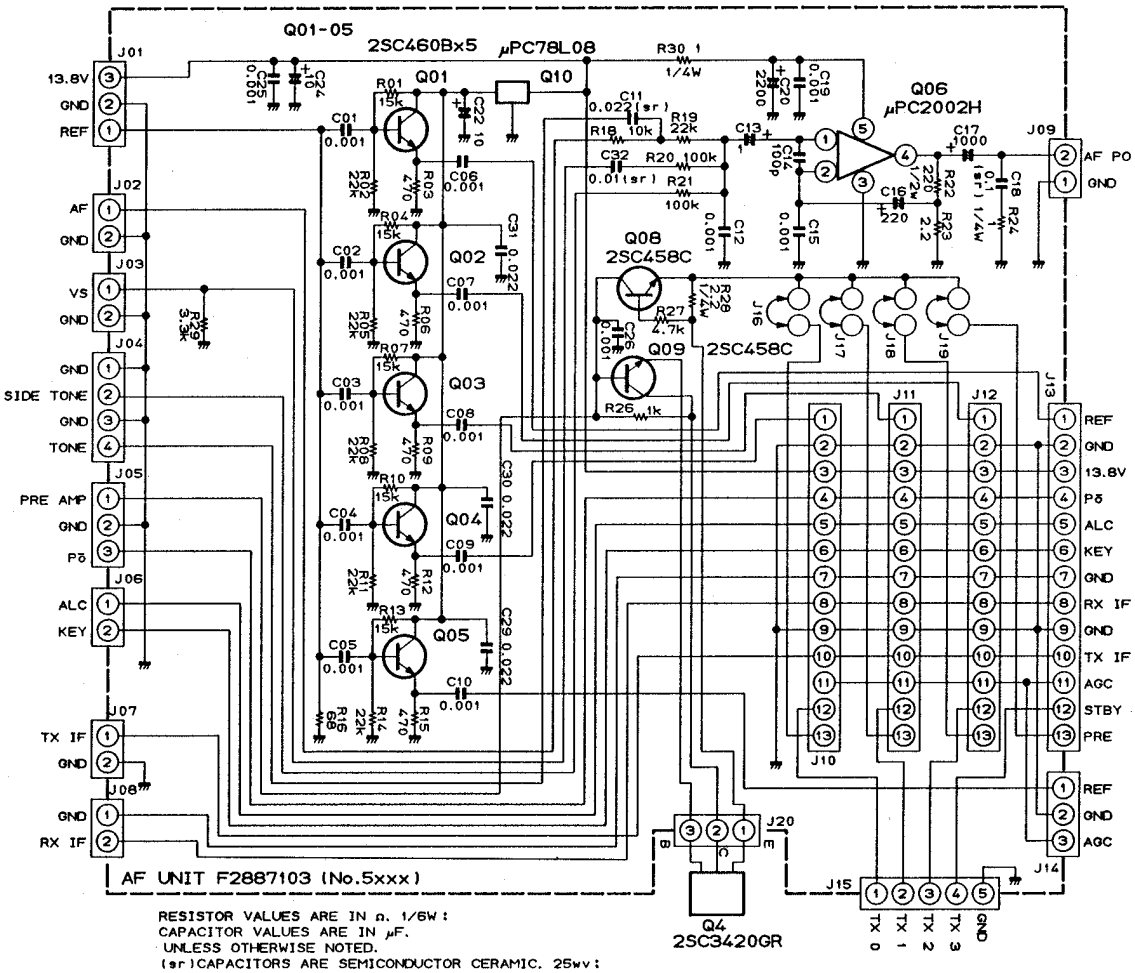


RESISTOR VALUES ARE IN Ω. 1/6W :
CAPACITOR VALUES ARE IN μF.
UNLESS OTHERWISE NOTED.
(sr)CAPACITORS ARE SEMICONDUCTOR CERAMIC. 25wv :

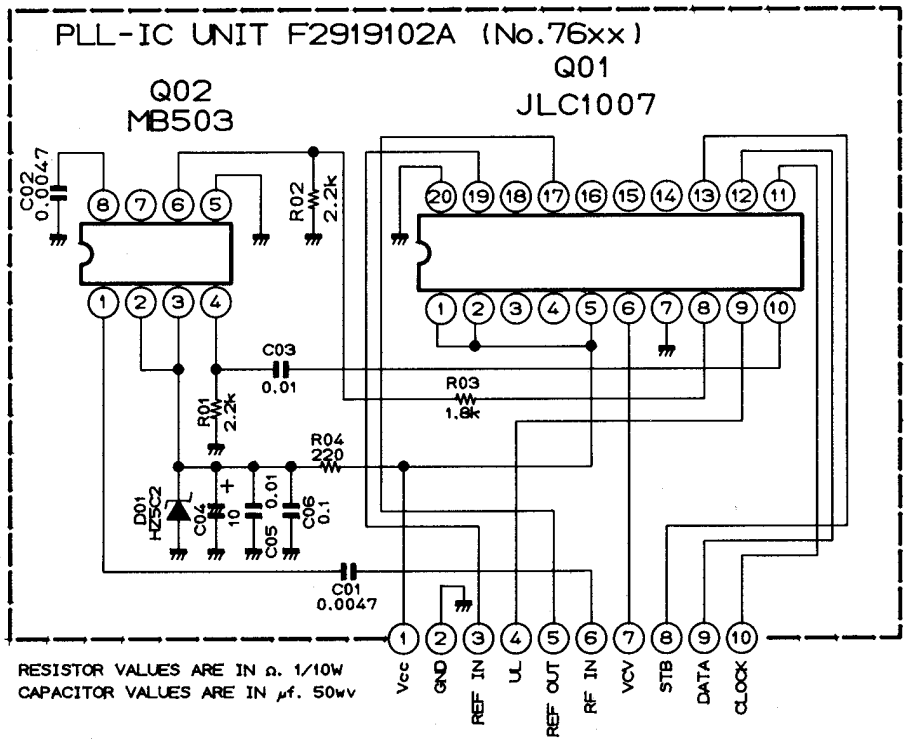


RESISTOR VALUES ARE IN Ω. 1/10W
CAPACITOR VALUES ARE IN μf. 50wv

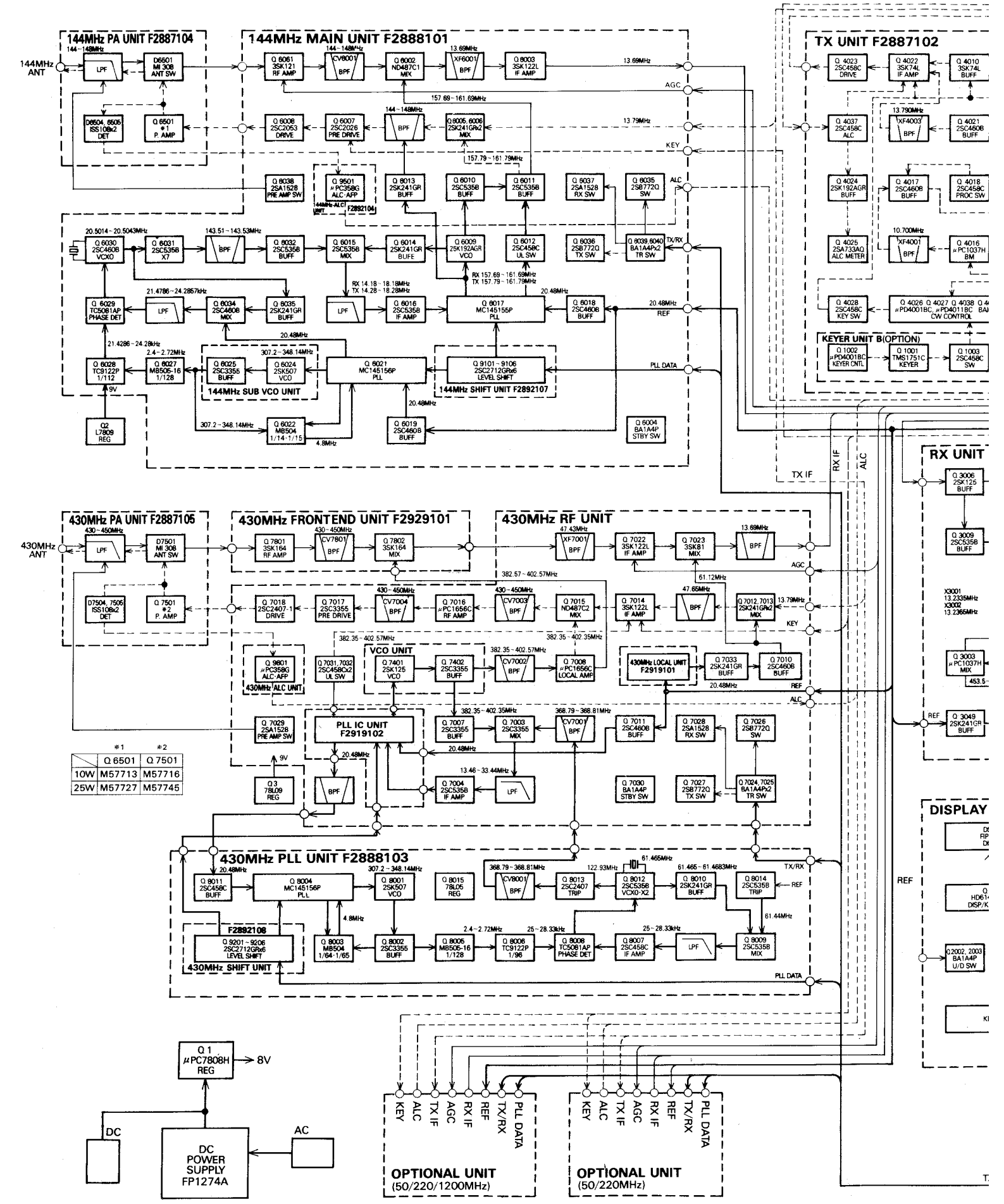
144MHz PA UNIT F2887104
144MHz MAIN UNIT F2888101
TX UNIT F2887102
144MHz ANT
LPF
D6501 MI 308 ANT SW
D6504, 6505 ISS108x2 DET
Q 6501 *1 P. AMP
Q 6061 3SK121 RF AMP
CV6001 BPF
Q 6002 ND487C1 MIX
XF6001 BPF
Q 6003 3SK122L IF AMP
13.69MHz
AGC
157.69 - 161.69MHz
Q 6008 2SC2053 DRIVE
Q 6007 2SC2026 PRE DRIVE
144 - 148MHz
Q 6005, 6006 2SK241GRx2 MIX
13.79MHz
KEY
157.79 - 161.79MHz
Q 6038 2SA1528 PRE AMP SW
Q 9501 μPC358G ALC-AFP
144MHz ALC UNIT
F2892104
Q 6013 2SK241GR BUFF
Q 6010 2SC5535B BUFF
Q 6011 2SC5535B BUFF
Q 6037 2SA1528 RX SW
Q 6035 2SB772Q SW
ALC
Q 4023 2SC458C DRIVE
Q 4022 3SK74L IF AMP
Q 4010 3SK74L BUFF
Q 4037 2SC458C ALC
XF4003 BPF
Q 4021 2SC460B BUFF
Q 4024 2SK192AGR BUFF
Q 4017 2SC460B BUFF
Q 4018 2SC458C PROC SW
Q 4025 2SA733AQ ALC METER
XF4001 BPF
Q 4016 μPC1037H BM
Q 4028 2SC458C KEY SW
Q 4026 Q 4027 Q 4038 μPD4001BC, μPD4011BC CW CONTROL
KEYER UNIT B(OPTION)
Q 1002 μPD4001BC KEYER CNTL
Q 1001 TMS1751C KEYER
Q 1003 2SC458C SW
20.5014 - 20.5043MHz
Q 6030 2SC460B VCXO
Q 6031 2SC535B X7
143.51 - 143.53MHz
Q 6032 2SC5535B BUFF
Q 6015 2SC5535B MIX
Q 6014 2SK241GR BUFF
Q 6009 25K192AGR VCO
Q 6012 2SC458C UL SW
Q 6036 2SB772Q TX SW
Q 6039, 6040 BA1A4Px2 TR SW
TX/RX
RX 14.18 - 18.18MHz
TX 14.28 - 18.28MHz
RX 157.68 - 161.69MHz
TX 157.79 - 161.79MHz
20.48MHz
Q 6029 TC5081AP PHASE DET
21.4786 - 24.2857kHz
LPF
Q 6034 2SC460B MIX
Q 6035 2SK241GR BUFF
Q 6016 2SC5358 IF AMP
Q 6017 MC145155P PLL
Q 6018 2SC460B BUFF
REF
21.4286 - 24.28kHz
2.4 - 2.72MHz
Q 6028 TC9122P 1/112
Q 6027 MB505-16 1/128
307.2 - 348.14MHz
Q 6025 2SC3355 BUFF
Q 6024 2SK507 VCO
144MHz SUB VCO UNIT
Q 6021 MC145156P PLL
Q 9101 - 9106 2SC2712GRx6 LEVEL SHIFT
144MHz SHIFT UNIT F2892107
PLL DATA
9V
Q2 L7809 REG
Q 6022 MB504 1/14-1/15
4.8MHz
Q 6019 2SC460B BUFF
Q 6004 BA1A4P STBY SW
TX IF
RX IF
ALC
RX UNIT
Q 3006 2SK125 BUFF
Q 3009 2SC5535B BUFF
X3001 13.2335MHz
X3002 13.2365MHz
Q 3003 μPC1037H MIX
Q 3049 2SK241GR BUFF
REF
DISPLAY
430MHz PA UNIT F2887105
430MHz FRONTEND UNIT F2929101
430MHz RF UNIT
430MHz ANT
430 - 450MHz
D7501 MI 308 ANT SW
Q 7801 3SK164 RF AMP
CV7801 BPF
Q 7802 3SK164 MIX
47.43MHz
XF7001 BPF
Q 7022 3SK122L IF AMP
Q 7023 3SK81 MIX
13.69MHz
382.57 - 402.57MHz
61.12MHz
47.65MHz
D7504, 7505 ISS108x2 DET
Q 7501 *2 P. AMP
Q 7018 2SC2407-1 DRIVE
Q 7017 2SC3355 PRE DRIVE
CV7004 BPF
Q 7016 μPC1656C RF AMP
CV7003 BPF
Q 7015 ND487C2 MIX
Q 7014 3SK122L IF AMP
Q 7012, 7013 2SK241GRx2 MIX
382.35 - 402.35MHz
Q 9801 μPC358G ALC-AFP
430MHz ALC UNIT
Q 7031, 7032 2SC458Cx2 UL SW
VCO UNIT
Q 7401 2SK125 VCO
Q 7402 2SC3355 BUFF
CV7002 BPF
Q 7008 μPC1656C LOCAL AMP
430MHz LOCAL UNIT F2919101
Q 7033 2SK241GR BUFF
Q 7010 2SC460B BUFF
Q 7029 2SA1528 PRE AMP SW
PLL IC UNIT F2919102
Q 7007 2SC3355 BUFF
Q 7003 2SC3355 MIX
368.79 - 368.81MHz
CV7001 BPF
Q 7011 2SC460B BUFF
Q 7028 2SA1528 RX SW
Q 7026 2SB772Q SW
13.46 - 33.44MHz
Q 7004 2SC5535B IF AMP
Q 7030 BA1A4P STBY SW
Q 7027 2SB772Q TX SW
Q 7024, 7025 BA1A4Px2 TR SW
Q 3 78L09 REG
*1 *2
Q 6501 Q 7501
10W M57713 M57716
25W M57727 M57745
430MHz PLL UNIT F2888103
Q 8011 2SC458C BUFF
Q 8004 MC145156P PLL
Q 8001 2SK507 VCO
Q 8015 78L05 REG
CV8001 BPF
Q 8013 2SC2407 TRIP
Q 8012 2SC5358 VCXO-X2
61.465MHz
61.465 - 61.4683MHz
Q 8010 2SK241GR BUFF
Q 8014 2SC5535B TRIP
61.44MHz
F2892108
Q 9201 - 9206 2SC2712GRx6 LEVEL SHIFT
430MHz SHIFT UNIT
Q 8003 MB504 1/64-1/65
Q 8002 2SC3355 BUFF
Q 8005 MB505-16 1/128
Q 8006 TC9122P 1/96
Q 8008 TC5061AP PHASE DET
Q 8007 2SC458C IF AMP
Q 8009 2SC5535B MIX
2.4 - 2.72MHz
25 - 28.33kHz
Q 1 μPC7808H REG
8V
DC
AC
DC POWER SUPPLY FP1274A
KEY
ALC
TX IF
AGC
RX IF
REF
TX/RX
PLL DATA
OPTIONAL UNIT (50/220/1200MHz)
OPTIONAL UNIT (50/220MHz)

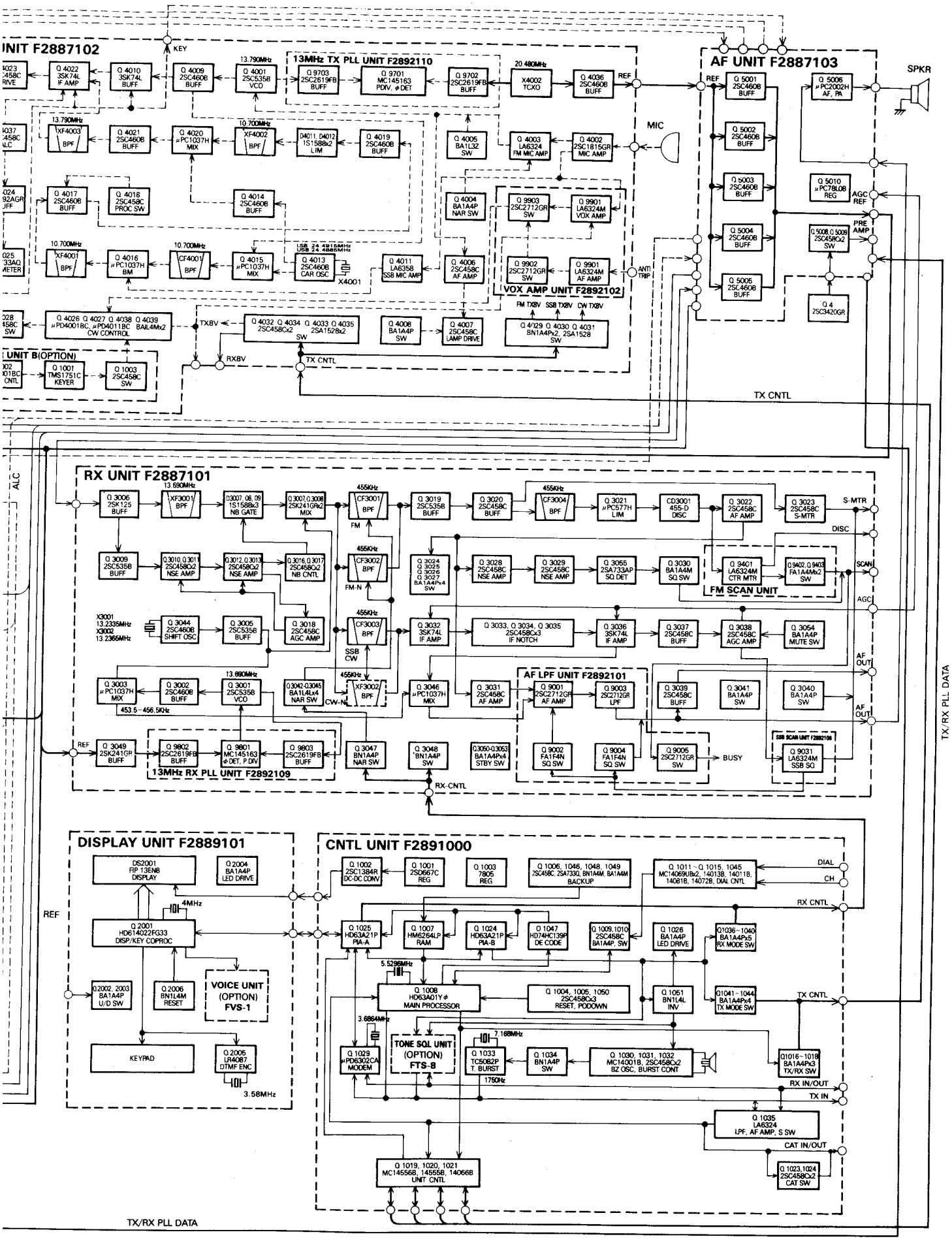


# FT-736R
## BLOCK DIAGRAM

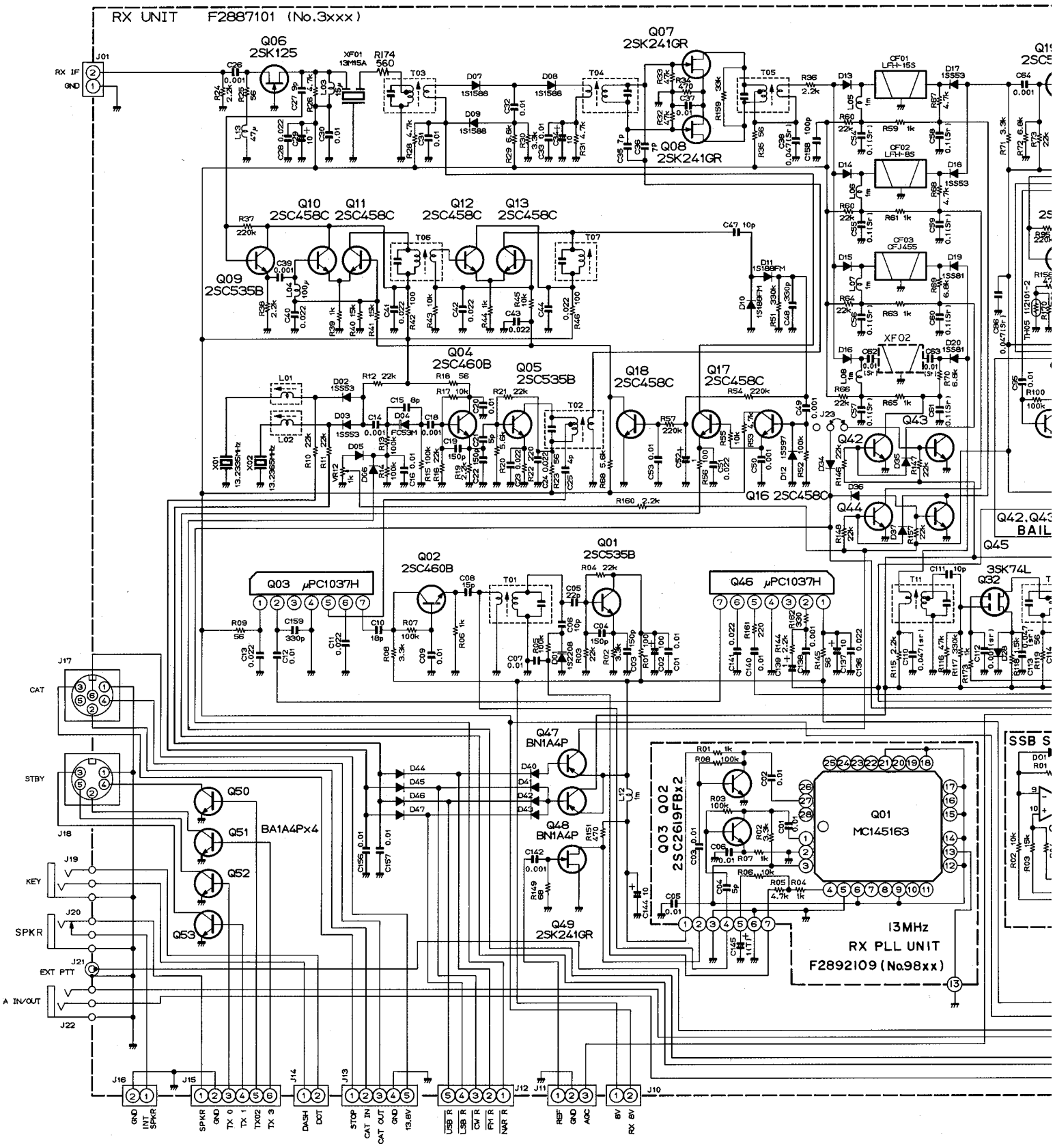


RESISTOR VALUES ARE IN Ω, 1/6W:
CAPACITOR VALUES ARE IN μF:
INDUCTOR VALUES ARE IN HENRIES, UNLESS OTHERWISE NOTED.
DIODES ARE TYPE 1SS270 UNLESS OTHERWISE NOTED.
(Sr)CAPACITORS ARE SEMICONDUCTOR CERAMIC, 25wv.
(T)CAPACITORS ARE TANTALUM.

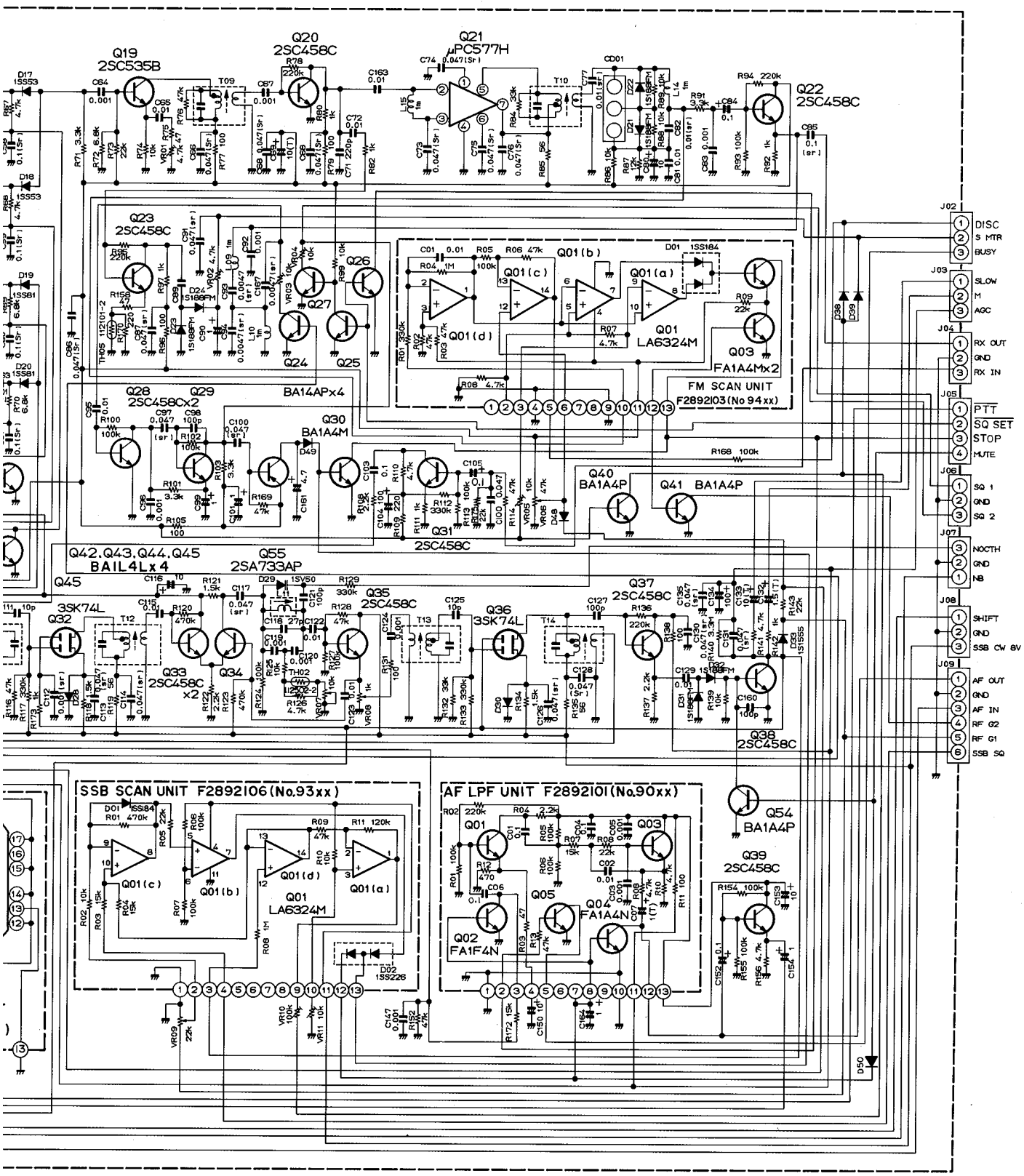
Q19
2SC535B
Q20
2SC458C
Q21
μPC577H
Q22
2SC458C
Q23
2SC458C
Q24
Q25
Q26
Q27
Q28
2SC458Cx2
Q29
BA14APx4
Q30
BA1A4M
Q31
2SC458C
Q01(b)
Q01(c)
Q01(a)
Q01(d)
Q01
LA6324M
Q03
FA1A4Mx2
FM SCAN UNIT
F2892103(No 94xx)
Q40
BA1A4P
Q41
BA1A4P
Q42.Q43.Q44.Q45
BA1L4Lx4
Q55
2SA733AP
Q45
Q32
3SK74L
Q33
2SC458C
x2
Q34
Q35
2SC458C
Q36
3SK74L
Q37
2SC458C
Q38
2SC458C
SSB SCAN UNIT F2892106(No.93xx)
Q01(c)
Q01(b)
Q01(d)
Q01(a)
Q01
LA6324M
AF LPF UNIT F2892101(No.90xx)
Q01
Q02
FA1F4N
Q03
Q04
FA1A4N
Q05
Q54
BA1A4P
Q39
2SC458C
J02
DISC
S MTR
BUSY
J03
SLOW
M
AGC
J04
RX OUT
GND
RX IN
J05
PTT
SQ SET
STOP
MUTE
J06
SQ 1
GND
SQ 2
J07
NOCTH
GND
NB
J08
SHIFT
GND
SSB CW 8V
J09
AF OUT
GND
AF IN
RF G2
RF G1
SSB SQ

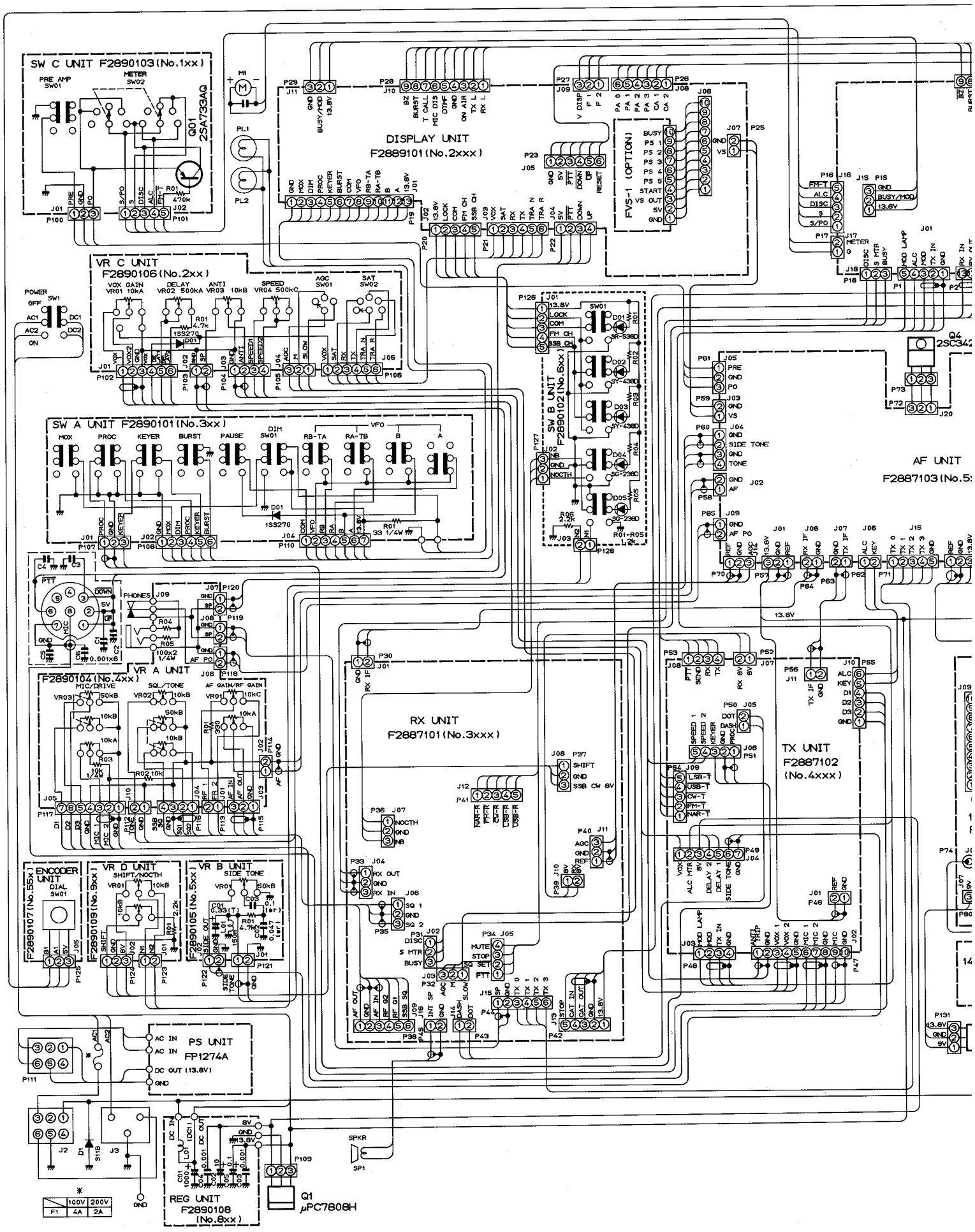
SW C UNIT F2890103(No.1xx)
DISPLAY UNIT
F2889101(No.2xxx)
FVS-1 (OPTION)
VR C UNIT
F2890106(No.2xx)
SW B UNIT
F2890102(No.6xx)
SW A UNIT F2890101(No.3xx)
AF UNIT
F2887103(No.5
VR A UNIT
F2890104(No.4xx)
RX UNIT
F2887101(No.3xxx)
TX UNIT
F2887102
(No.4xxx)
ENCODER UNIT
F2890107(No.55x)
VR D UNIT
F2890109(No.9xx)
VR B UNIT
F2890105(No.5xx)
PS UNIT
FP1274A
REG UNIT
F2890108
(No.8xx)
Q1
μPC7808H
SPKR

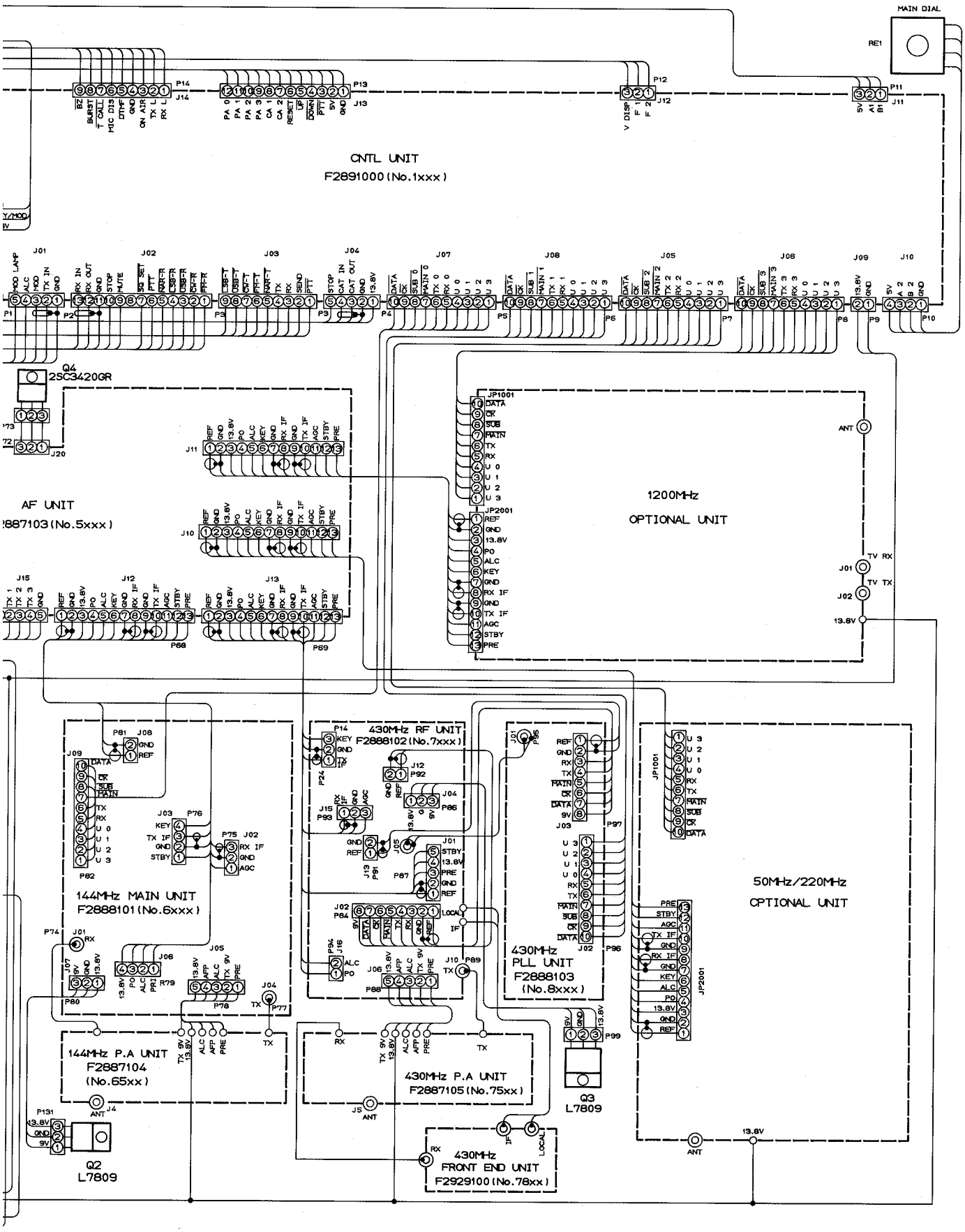


RESISTOR VALUES ARE IN Ω. 1/6W:
CAPACITOR VALUES ARE IN μF.
(T)CAPACITORS ARE TANTALUM.
(sr)CAPACITORS ARE SEMICONDUCTOR CERAMIC. 25wv. UNLESS OTHERWISE NOTED.

# FT-736

## CONNECTION DIAGRAM

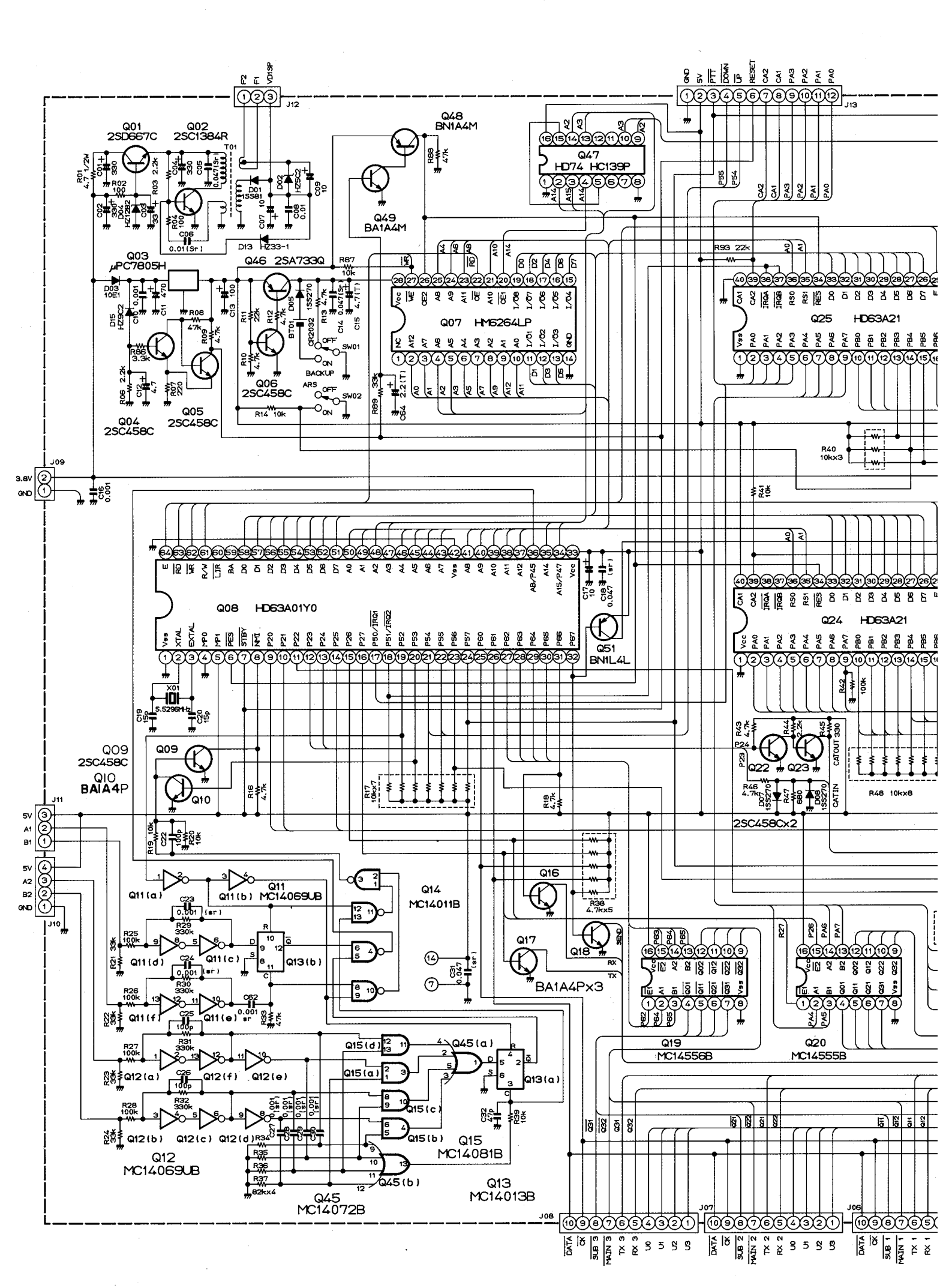
Q01 2SD667C
Q02 2SC1384R
Q03 μPC7805H
Q04 2SC458C
Q05 2SC458C
Q06 2SC458C
Q07 HM6264LP
Q08 HD63A01Y0
Q09 2SC458C
Q10 BA1A4P
Q11 MC14069UB
Q12 MC14069UB
Q13 MC14013B
Q14 MC14011B
Q15 MC14081B
Q16
Q17
Q18
BA1A4Px3
Q19 MC14556B
Q20 MC14555B
Q22
Q23
2SC458Cx2
Q24 HD63A21
Q25 HD63A21
Q45 MC14072B
Q46 2SA733Q
Q47 HD74 HC139P
Q48 BN1A4M
Q49 BA1A4M
Q51 BN1L4L
J09
J10
J11
J12
J13
J06
J07
J08
3.6V
GND
5V
A1
B1
A2
B2
X01 5.5296MHz
SW01
SW02
BACKUP
ARS
OFF
ON
R40 10kx3
R48 10kx8
R38 4.7kx5
R17 10kx7
R93 22k
R87 10k
R88 4.7k
R89 33k
R41 10k
R42 100k
R14 10k
R16 4.7k
R18 4.7k
R19 10k
R20 10k
R22 33k
R23 33k
R24 33k
R25 100k
R26 100k
R27 100k
R28 100k
R29 330k
R30 330k
R31 330k
R32 330k
R33 4.7k
R34 82kx4
R35
R36
R37
R39 10k
R46 4.7k
R47 680
R43 4.7k
R44 2.2k
R45 330
CATOUT
CATIN
SEND
RX
TX
DATA
SUB 3
MAIN 3
TX 3
RX 3
SUB 2
MAIN 2
TX 2
RX 2
SUB 1
MAIN 1
TX 1
RX 1

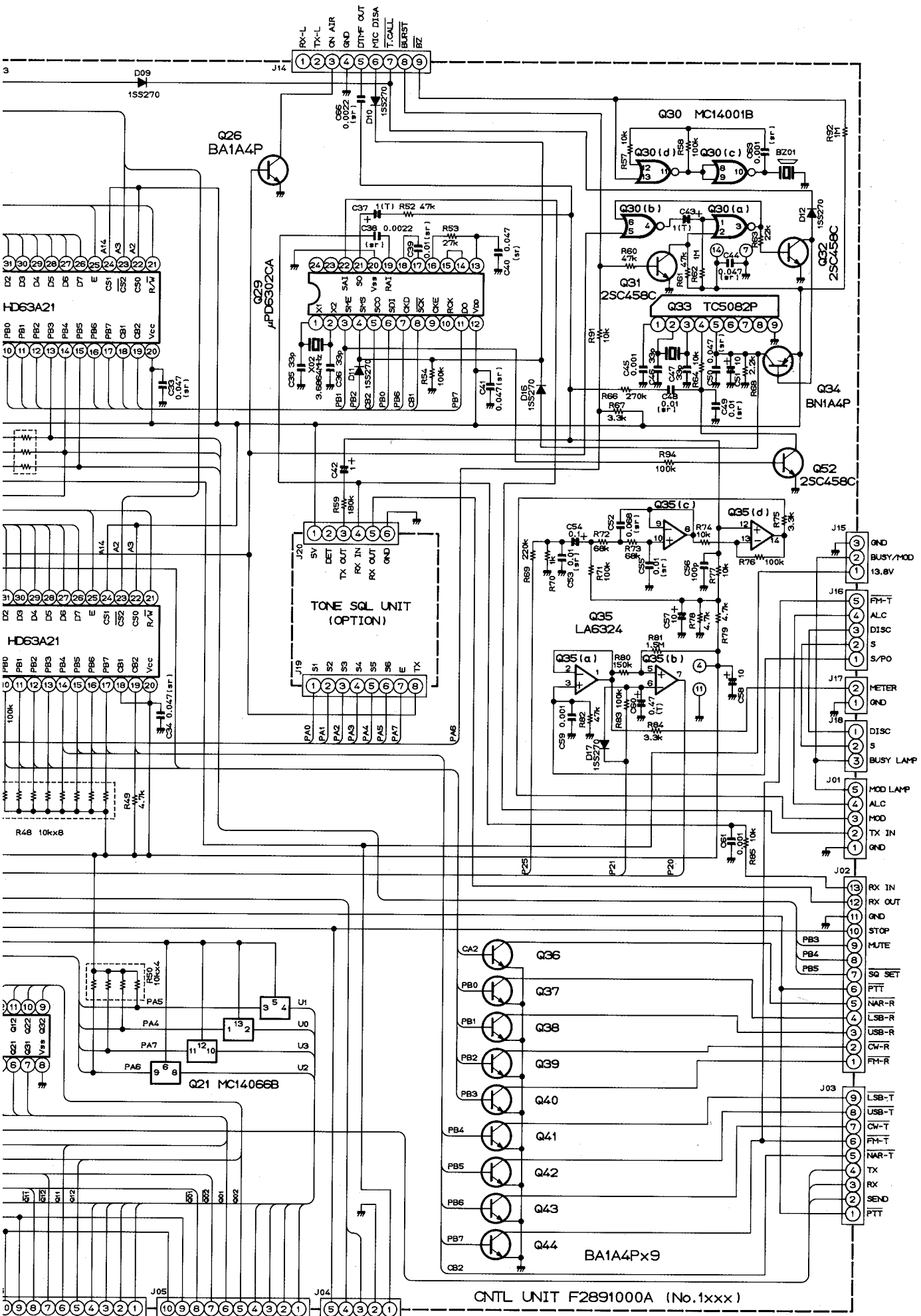


RESISTOR VALUES ARE IN Ω. 1/6W:
CAPACITOR VALUES ARE IN μF.
(T)CAPACITORS ARE TANTALUM.
(sr)CAPACITORS ARE SEMICONDUCTOR CERAMIC. 25wv.
UNLESS OTHERWISE NOTED.

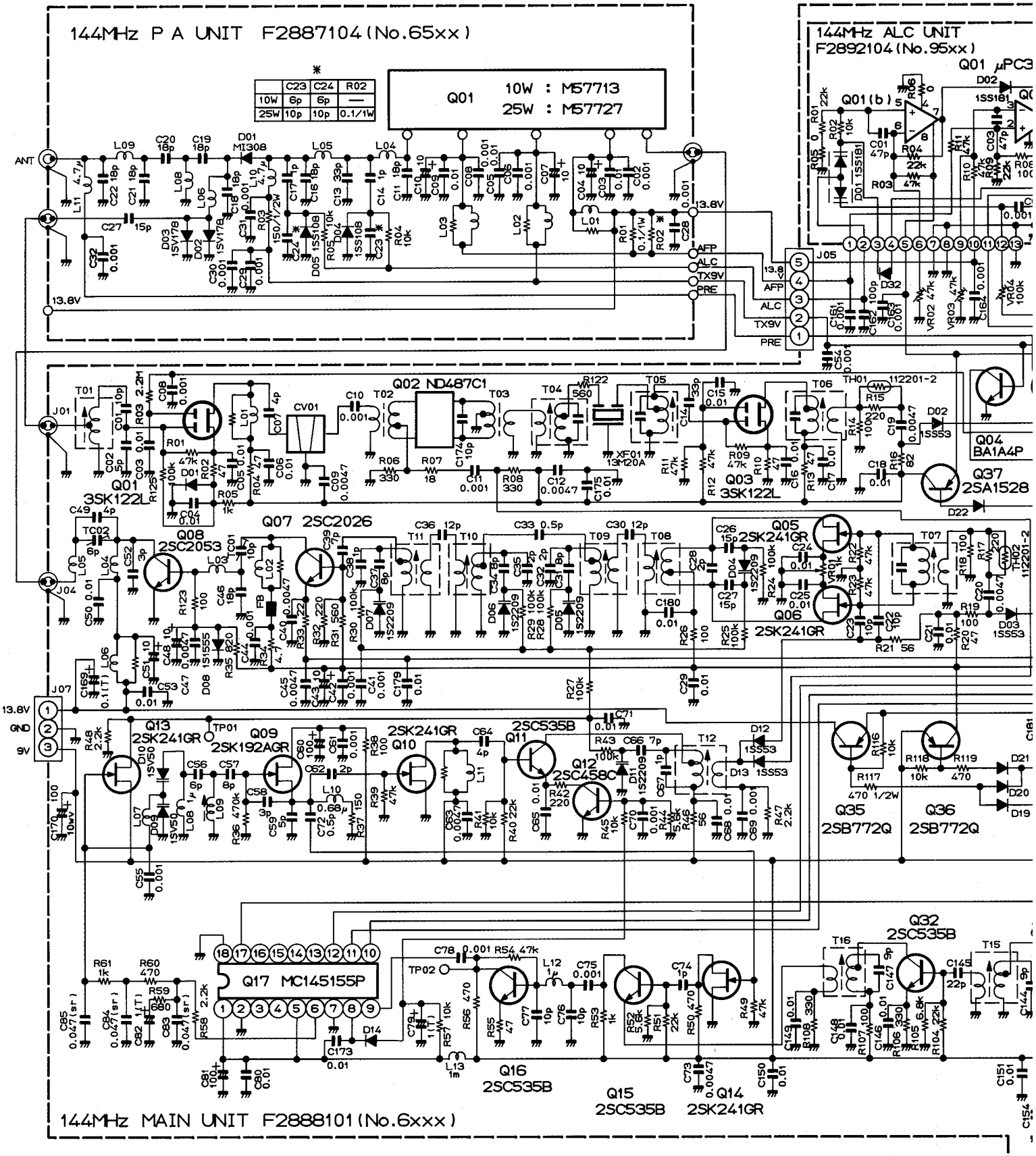


RESISTOR VALUES ARE IN Ω. 1/6W:
CAPACITOR VALUES ARE IN μF.
INDUCTOR VALUES ARE IN HENRIES.
UNLESS OTHERWISE NOTED.

DIODES ARE TYPE 1SS270 UNLESS OTHERWISE NOTED.
(T)CAPACITORS ARE TANTALUM.
(sr)CAPACITORS ARE SEMICONDUCTOR CERAMIC. 25wv:

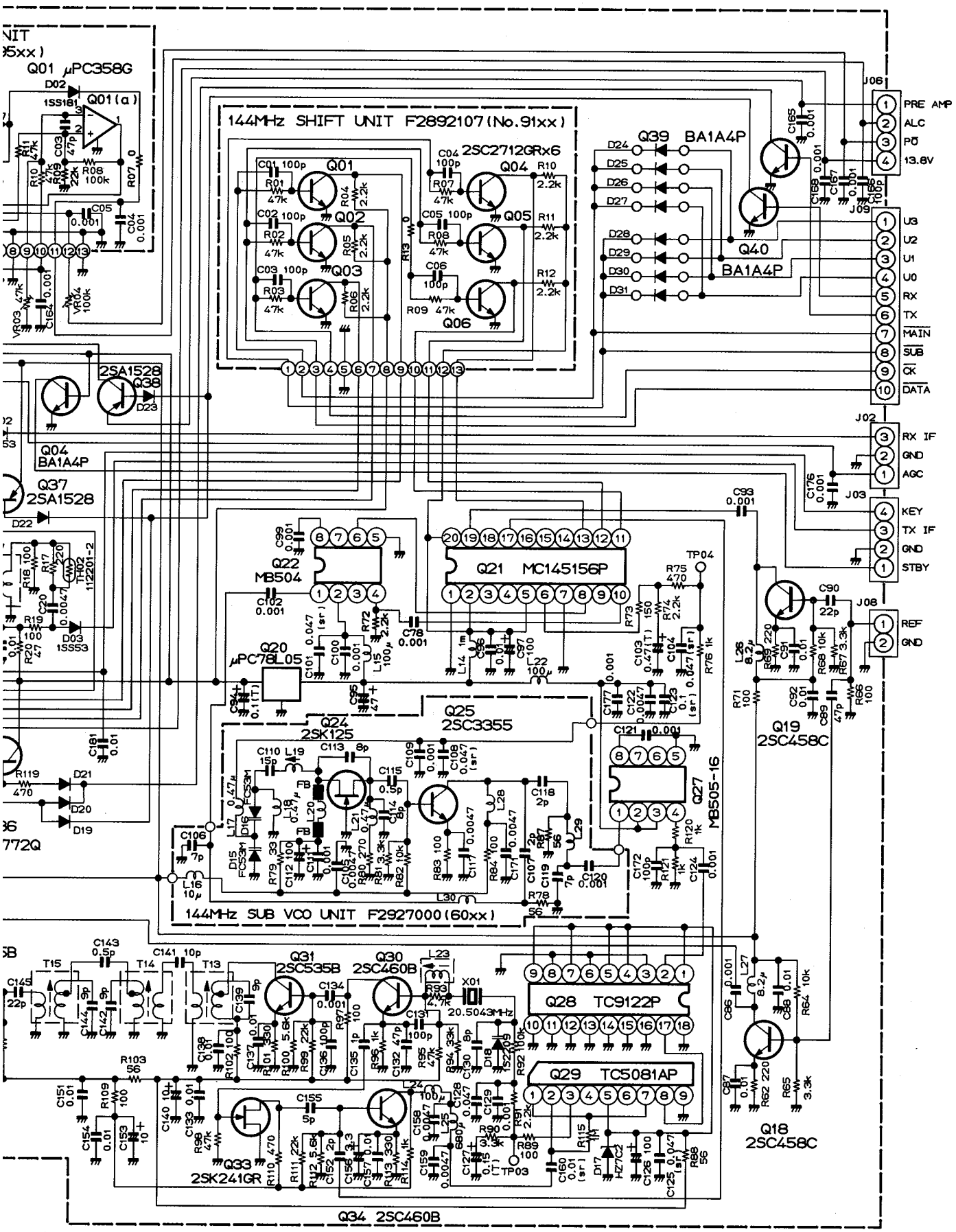
Q01 μPC358G
144MHz SHIFT UNIT F2892107(No.91xx)
2SC2712GRx6
Q39 BA1A4P
Q40 BA1A4P
Q04 BA1A4P
Q37 2SA1528
2SA1528
Q38
Q22 MB504
Q21 MC145156P
Q20 μPC78L05
Q24 2SK125
Q25 2SC3355
Q27 MB505-16
Q19 2SC458C
144MHz SUB VCO UNIT F2927000(60xx)
Q31 2SC535B
Q30 2SC460B
Q28 TC9122P
Q29 TC5081AP
Q18 2SC458C
Q33 2SK241GR
Q34 2SC460B
PRE AMP
ALC
PO
13.8V
U3
U2
U1
U0
RX
TX
MAIN
SUB
CK
DATA
RX IF
GND
AGC
KEY
TX IF
GND
STBY
REF
GND

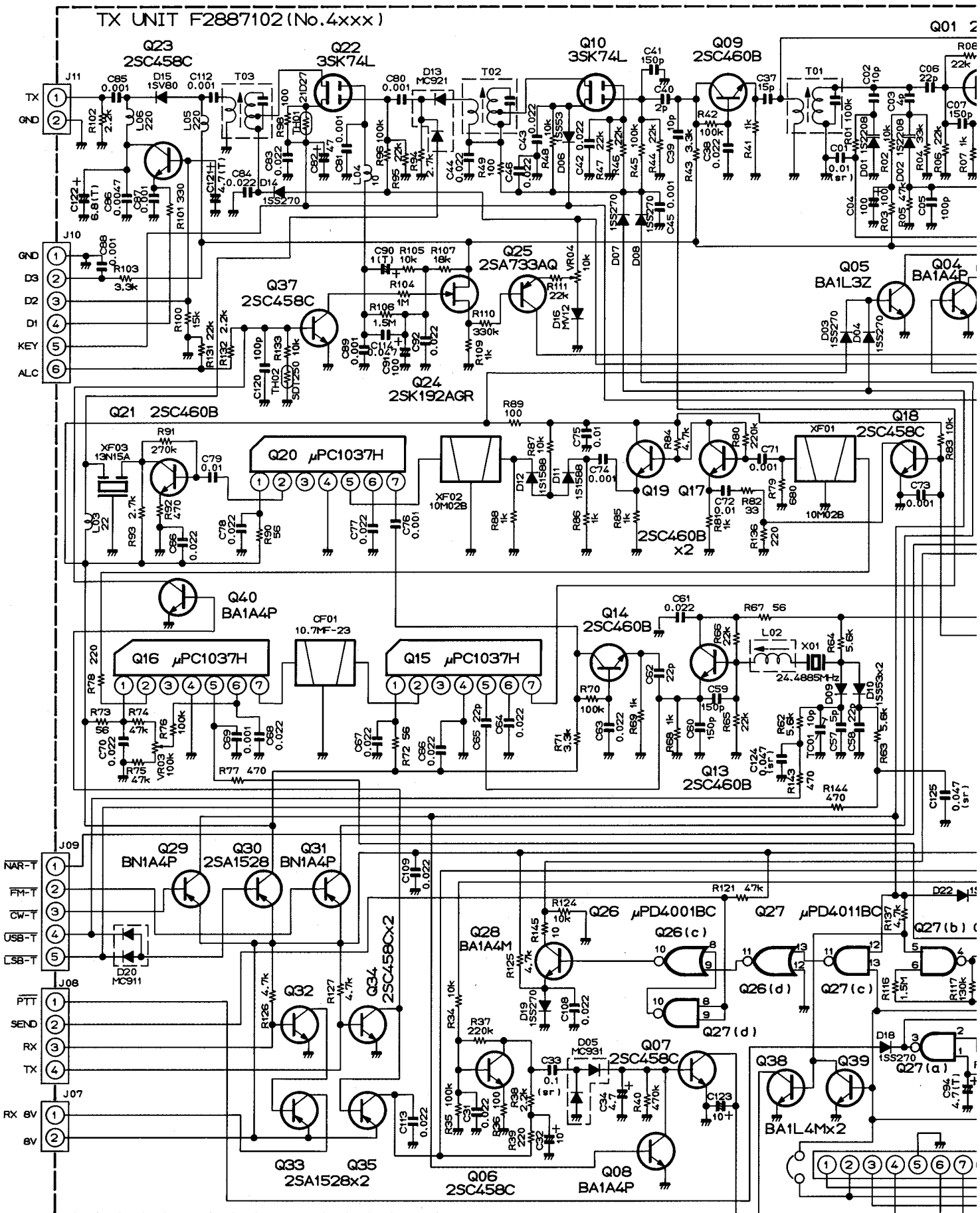
TX UNIT F2887102(No.4xxx)
Q23 2SC458C
Q22 3SK74L
Q10 3SK74L
Q09 2SC460B
Q01
Q37 2SC458C
Q25 2SA733AQ
Q24 2SK192AGR
Q05 BA1L3Z
Q04 BA1A4P
Q21 2SC460B
Q20 μPC1037H
Q19 Q17 2SC460B x2
Q18 2SC458C
Q40 BA1A4P
Q16 μPC1037H
Q15 μPC1037H
Q14 2SC460B
Q13 2SC460B
Q29 BN1A4P
Q30 2SA1528
Q31 BN1A4P
Q32
Q34 2SC458Cx2
Q33 Q35 2SA1528x2
Q28 BA1A4M
Q26 μPD4001BC
Q27 μPD4011BC
Q07 2SC458C
Q06 2SC458C
Q08 BA1A4P
Q38 Q39 BA1L4Mx2
J11
J10
J09
J08
J07
TX
GND
D3
D2
D1
KEY
ALC
NAR-T
FM-T
CW-T
USB-T
LSB-T
PTT
SEND
RX
TX
RX 8V
8V
RESISTOR VALUES ARE IN Ω. 1/6W:
CAPACITOR VALUES ARE IN μF.
INDUCTOR VALUES ARE IN HENRIES: UNLESS OTHERWISE NOTED.
(T)CAPACITORS ARE TANTALUM.
(sr)CAPACITORS ARE SEMICONDUCTOR CERAMIC. 25wv.

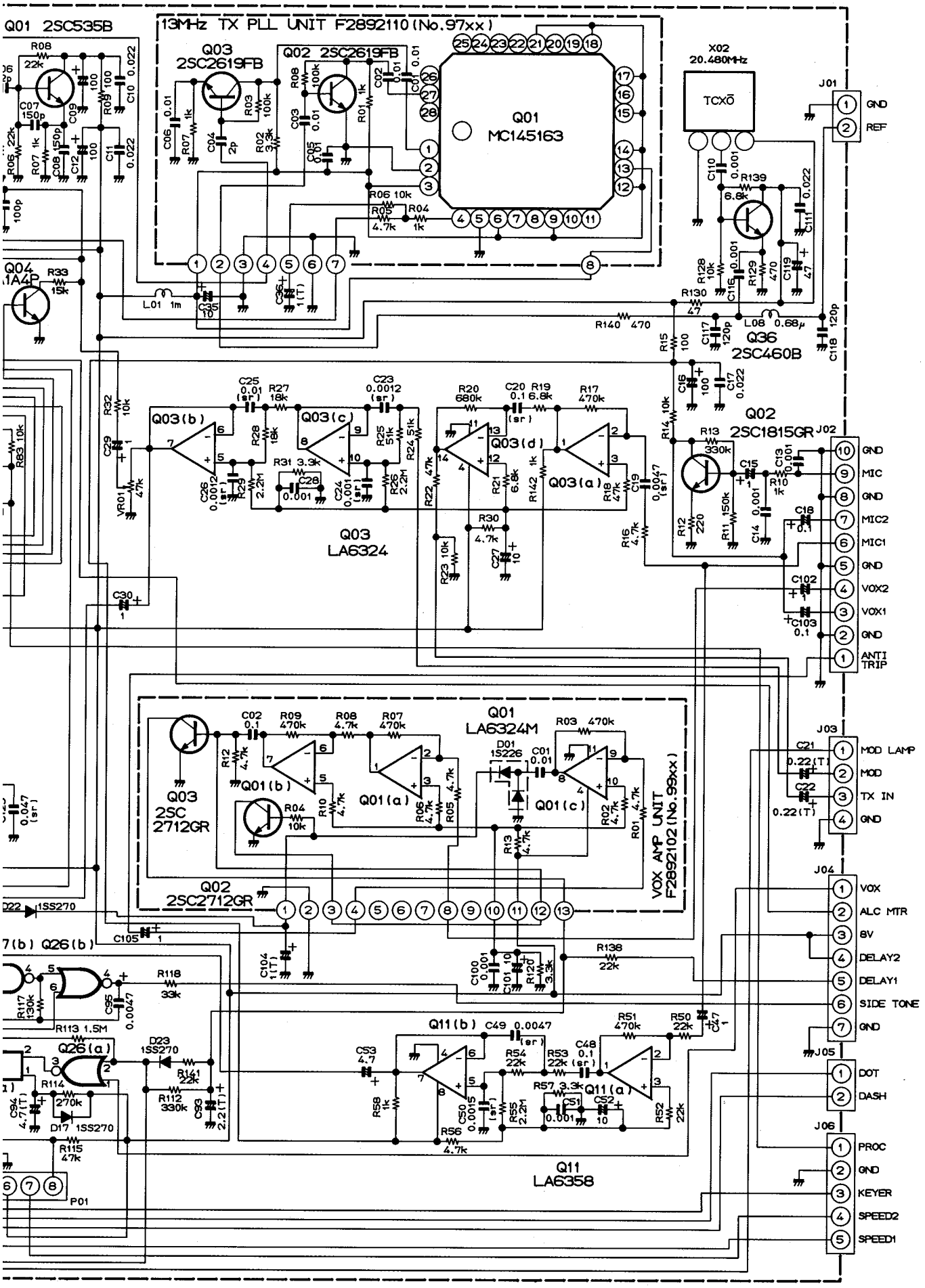
Q01 2SC535B
13MHz TX PLL UNIT F2892110(No.97xx)
Q03 2SC2619FB
Q02 2SC2619FB
Q01 MC145163
X02 20.480MHz
TCXO
J01
GND
REF
Q04
Q36 2SC460B
Q02 2SC1815GR
J02
GND
MIC
GND
MIC2
MIC1
GND
VOX2
VOX1
GND
ANTI TRIP
Q03(b)
Q03(c)
Q03(d)
Q03(a)
Q03 LA6324
Q01 LA6324M
Q03 2SC 2712GR
Q02 2SC2712GR
Q01(b)
Q01(a)
Q01(c)
VOX AMP UNIT F2892102(No.99xx)
J03
MOD LAMP
MOD
TX IN
GND
J04
VOX
ALC MTR
8V
DELAY2
DELAY1
SIDE TONE
GND
J05
DOT
DASH
J06
PROC
GND
KEYER
SPEED2
SPEED1
Q26(b)
Q26(a)
Q11(b)
Q11(a)
Q11 LA6358
P01

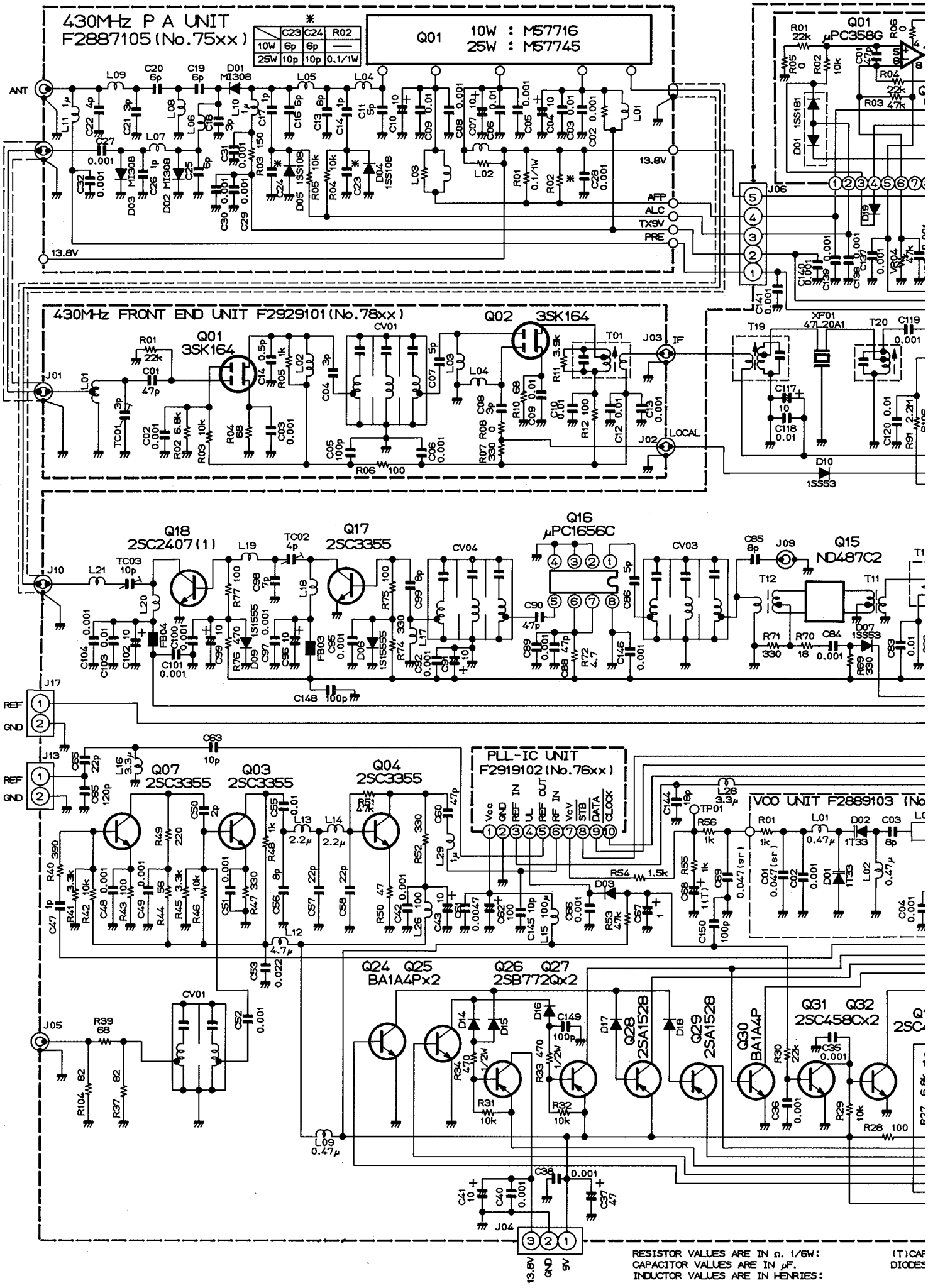
430MHz P A UNIT
F2887105 (No.75xx)
Q01 10W : M57716
25W : M57745
430MHz FRONT END UNIT F2929101 (No.78xx)
Q01 3SK164
Q02 3SK164
Q01 μPC358G
Q18 2SC2407(1)
Q17 2SC3355
Q16 μPC1656C
Q15 ND487C2
PLL-IC UNIT
F2919102 (No.76xx)
VCO UNIT F2889103
Q07 2SC3355
Q03 2SC3355
Q04 2SC3355
Q24 Q25 BA1A4Px2
Q26 Q27 2SB772Qx2
Q28 2SA1528
Q29 2SA1528
Q30 BA1A4P
Q31 Q32 2SC458Cx2
ANT
13.8V
AFP
ALC
TX9V
PRE
IF
LOCAL
REF
GND
RESISTOR VALUES ARE IN Ω. 1/6W:
CAPACITOR VALUES ARE IN μF.
INDUCTOR VALUES ARE IN HENRIES:

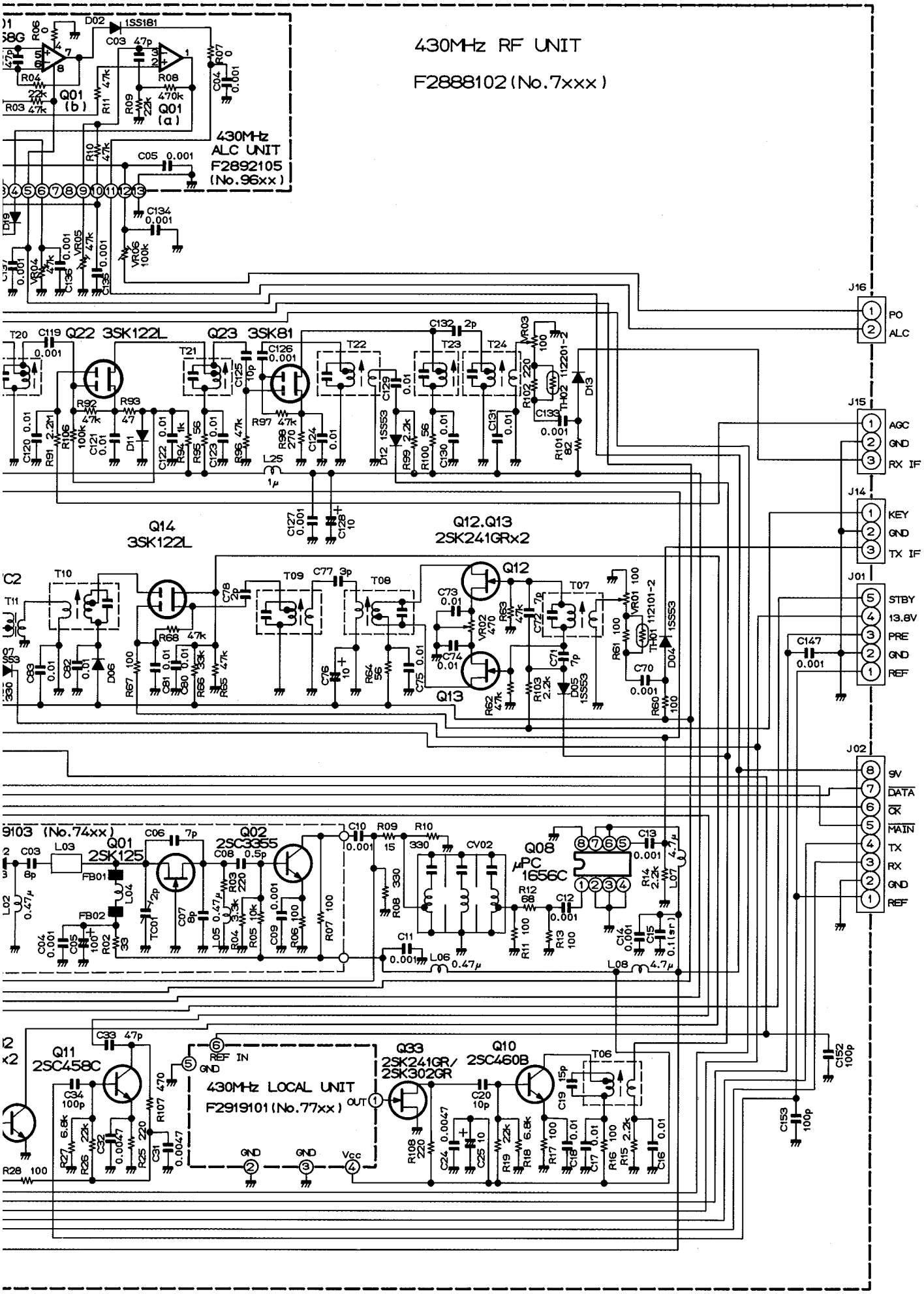


(T)CAPACITORS ARE TANTALUM.
DIODES ARE TYPE 1SS270 UNLESS OTHERWISE NOTED.

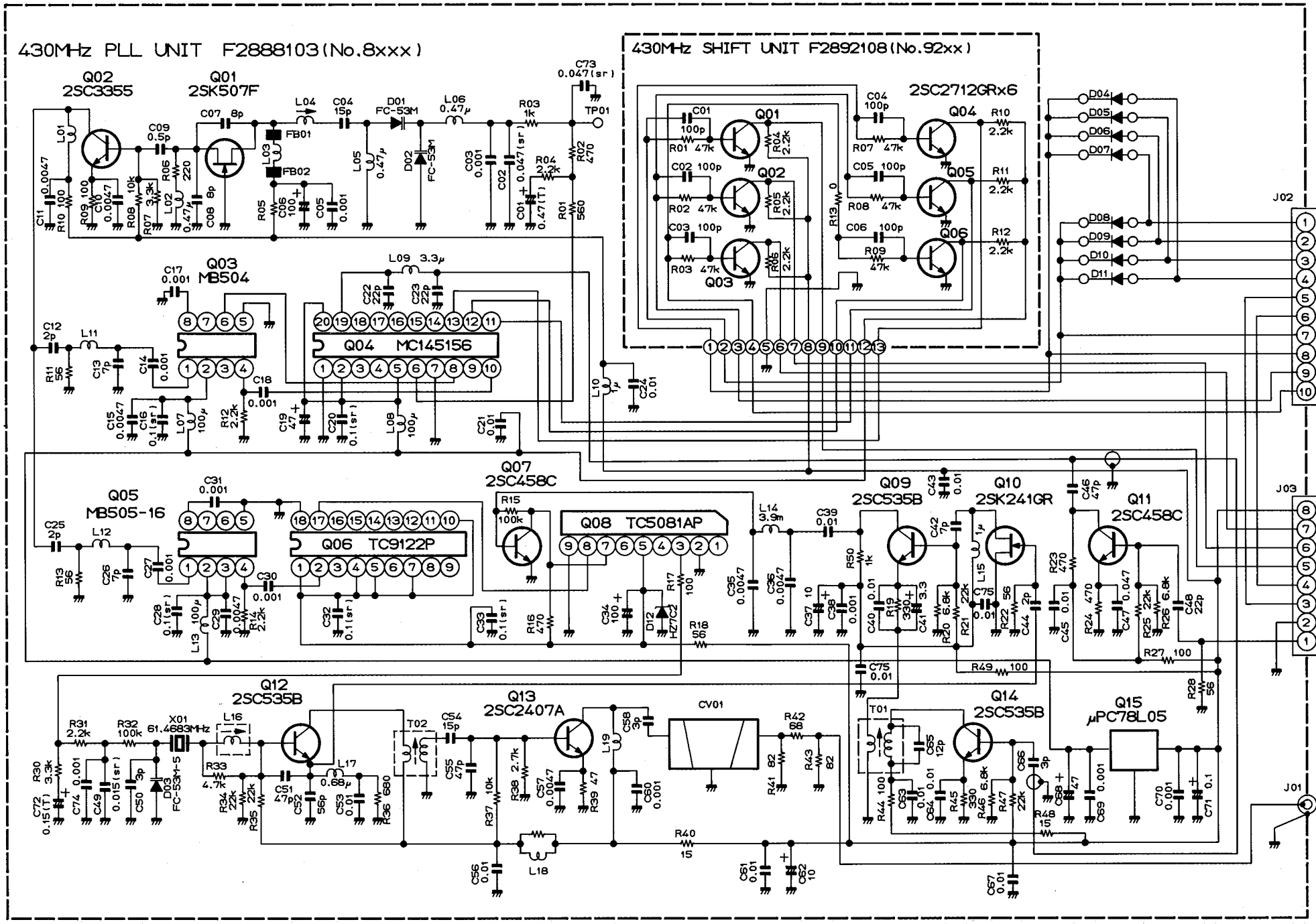


430MHz FRONT END UNIT F2929100(No.78xx)

Q01

Q02

RESISTOR VALUES ARE IN Ω. 1/6W:
CAPACITOR VALUES ARE IN μF.
INDUCTOR VALUES ARE IN HENRIES:
(T)CAPACITORS ARE TANTALUM.
(sr)CAPACITORS ARE SEMICONDUCTOR CERAMIC 25wv.

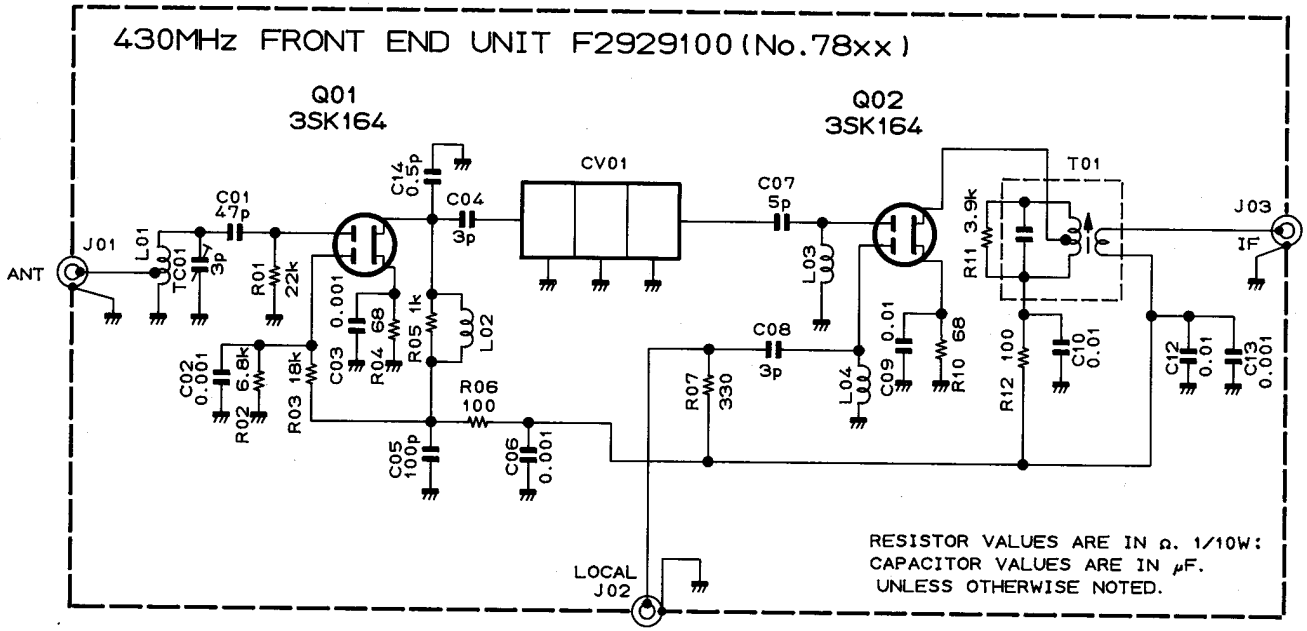


RESISTOR VALUES ARE IN Ω. 1/6W:
CAPACITOR VALUES ARE IN μF.
INDUCTOR VALUES ARE IN HENRIES:
(T)CAPACITORS ARE TANTALUM.
(sr)CAPACITORS ARE SEMICONDUCTOR CERAMIC 25wv.
UNLESS OTHERWISE NOTED.

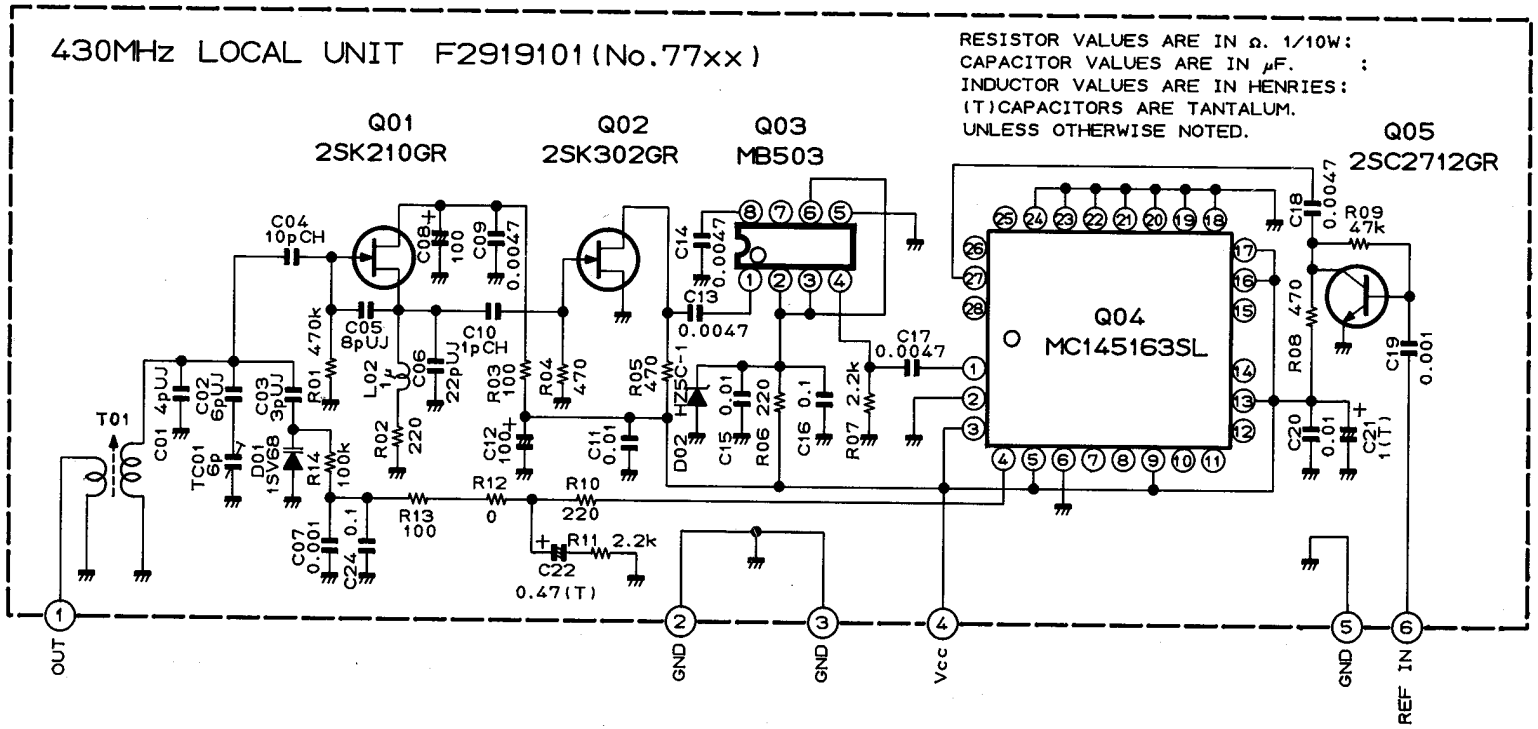

Copyright © 1992
Yaesu Musen Co., Ltd.
All rights reserved.

E2430100A(306S-TK)